





KST™

Future Connection

Stainless Steel Cable Ties



SHINKWANG TRADE CO.

서울특별시 강남구 삼성동 159-1
한국종합무역센타 30층 3001호
TEL : 02-551-3026 / FAX : 02-551-3100, 3200
H.P : 010-3366-5847
http://shinkwangtrade.com
E-MAIL : sinkwang2000@naver.com

KST™
Future Connection

Stainless Steel Cable Ties Series

K.S.Terminals Inc. proudly introduce a full range stainless steel cable ties for aircrafts, marine and engineering construction applications.

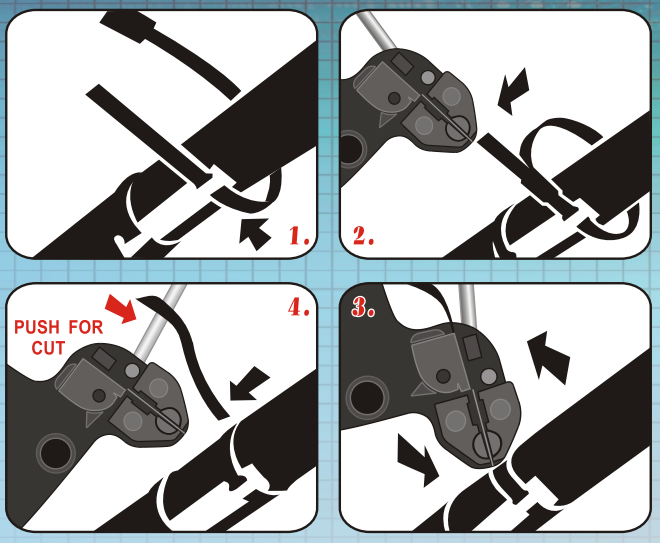

Various range of sizes

Over 17 standard lengths from 152mm up to the longest 1050 mm will be suitable for the most application fields. Depending on different width from 4.5mm to 12mm of stainless steel cable ties, the minimum loop tensile strength will be certified from 45.3Kg to 136Kg.

Easy installation & Safer application

K.S.Terminals stainless steel cable ties series are designed for self-locking, less-time consumption. There are different mechanisms are precisely designed in ladder type, ladder type with nylon coating, with ball lock and soon for various requirements of Min. loop tensile strength. Combined the low insertion force, smooth surfaces, strong locking mechanism factors, K.S.T.stainless steel cable ties series are perfectly applicable for safe, efficient, handy installation.

Best Materials for Tough Environments

Two major materials, 316 stainless steel and Nylon 11 , are especially designed for the most tough environments.

Temperature Range:
316 Stainless Steel : -80 ° C~+538 ° C

Application Fields:

- Telecommunications
- Marine Vessels
- Aircrafts
- Engineering Mechanism



OIL REFINERIES AND OFFSHORE PLATFORMS



SHIPYARDS

Catalog Number System :

S T L C - 1 9 5 S
(1) (2)(3) (4) (5)

(1) ST-Stainless Steel Material
(2) L -Ladder type B - With ball lock
(3) C-Nylon coating on stainless steel
(4) 195-Length (mm)
(5) S-Width Range : 4.5, 7, 8,12 (mm)

STAINLESS STEEL TIE

STAINLESS STEEL TIE (LADDER TYPE)

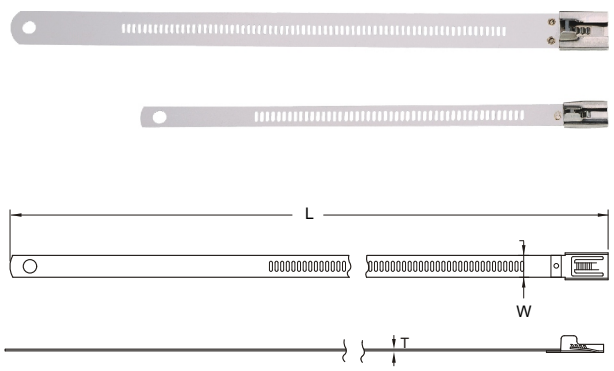

SUS 316 T=0.012" (0.3mm)

ITEM NO.	Max Bundle Dia		" L " Length Approx		" W " Width Approx		Min Loop Tensile		Pkg. Qty.
	inch	mm	inch	mm	inch	mm	lbs	Kg	
STL-150S	0.9	22	6	150	.276	7	250	113.4	100
STL-195S	1.7	45	8	195					
STL-255S	2.5	64	10	255					
STL-335S	3.5	89	13	335					
STL-490S	5.4	139	19	490					
STL-635S	7.2	185	25	635					
STL-150M	0.9	22	6	150	.472	12	250	113.4	100
STL-195M	1.7	45	8	195					
STL-255M	2.5	64	10	255					
STL-335M	3.5	89	13	335					
STL-490M	5.4	139	19	490					
STL-635M	7.2	185	25	635					50

STAINLESS STEEL TIE (LADDER TYPE WITH NYLON COATING)

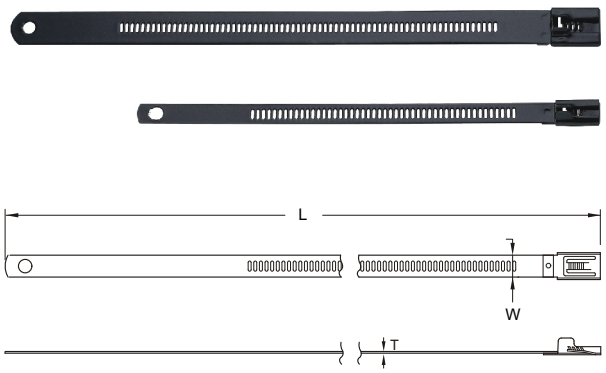

SUS 316 T=0.012" (0.3mm)
BLACK NYLON 11 COATING

ITEM NO.	Max Bundle Dia		" L " Length Approx		" W " Width Approx		Min Loop Tensile		Pkg. Qty.
	inch	mm	inch	mm	inch	mm	lbs	Kg	
STLC-150S	0.9	22	6	150	.276	7	250	113.4	100
STLC-195S	1.7	45	8	195					
STLC-255S	2.5	64	10	255					
STLC-335S	3.5	89	13	335					
STLC-490S	5.4	139	19	490					
STLC-635S	7.2	185	25	635					
STLC-150M	0.9	22	6	150	.472	12	250	113.4	100
STLC-195M	1.7	45	8	195					
STLC-255M	2.5	64	10	255					
STLC-335M	3.5	89	13	335					
STLC-490M	5.4	139	19	490					
STLC-635M	7.2	185	25	635					50

MARKER PLATE

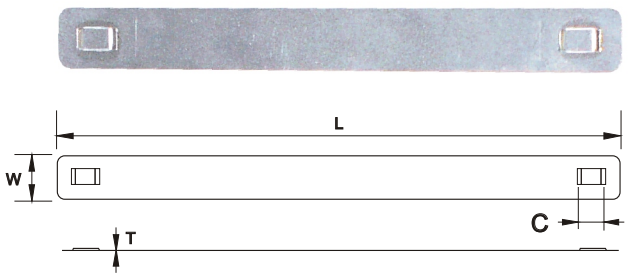

SUS 316 T=0.25mm

ITEM NO.	L (mm)	W (mm)	C (mm)
SMPS-4.5	88.9	9.5	5.9
SMPS-8.0	102	10	11

MARKER PLATE

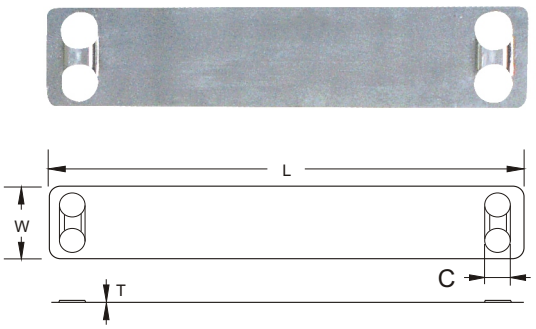

SUS 316 T=0.25mm

ITEM NO.	L (mm)	W (mm)	C (mm)
SMPM-4.5	88.9	19.0	6.2

STAINLESS STEEL TIE

STAINLESS STEEL TIE (WITH BALL LOCK)

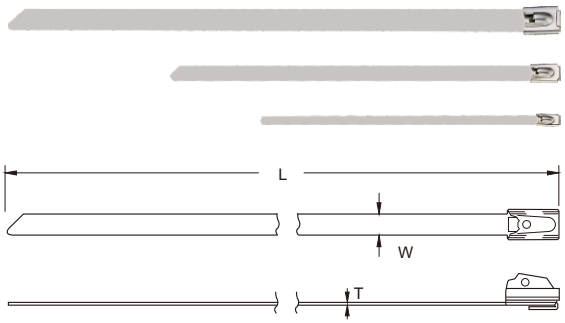

SUS 316 T=0.012"(0.3mm), " L" TYPE: 0.4mm

ITEM NO.	Max Bundle Dia		" L " Length Approx		" W " Width Approx		Min Loop Tensile		Pkg. Qty.
	inch	mm	inch	mm	inch	mm	lbs	Kg	
STB-125S	0.8	20	5	125	.177	4.5	100	45.4	100
STB-152S	1.0	25	6	152					
STB-200S	2.0	50	8	200					
STB-250S	2.4	60	10	250					
STB-300S	3.0	75	12	300					
STB-360S	4.0	102	14	360					
STB-400S	4.3	108	16	400					
STB-500S	5.5	140	20	500					
STB-520S	6.0	152	20	520					
STB-680S	8.0	203	27	680					
STB-840S	10.0	254	33	840					
STB-1050S	12.5	318	41	1050					25
STB-152M	1.0	25	6	152	.315	8.0	250	113.4	50
STB-200M	2.0	50	8	200					
STB-250M	2.4	60	10	250					
STB-300M	3.0	75	12	300					
STB-360M	4.0	102	14	360					
STB-520M	6.0	152	20	520					
STB-680M	8.0	203	27	680					
STB-840M	10.0	254	33	840					
STB-1050M	12.5	318	41	1050					25
STB-290L	3.2	80	11	290	.472	12.0	595	270.0	25
STB-360L	4.0	102	14	360					
STB-430L	4.7	121	17	430					
STB-520L	6.0	152	20	520					
STB-600L	6.9	175	24	600					
STB-680L	8.0	203	27	680					
STB-750L	9.1	230	30	750					
STB-840L	10.0	254	33	840					
STB-910L	10.7	273	36	910					
STB-1000L	11.9	302	39	1000					10
STB-1070L	12.7	325	42	1070					
STB-1200L	13.8	351	47	1200					

STAINLESS STEEL TIE (BALL LOCK WITH EPOXY COATING)

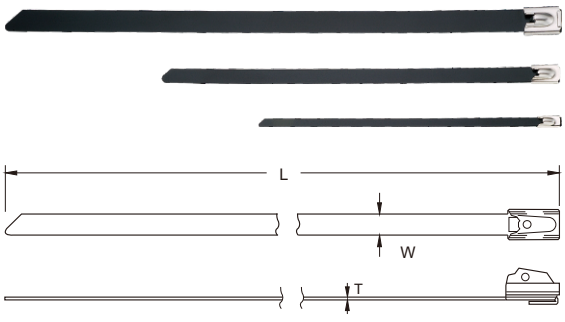

SUS 316 T=0.012"(0.3mm), " L" TYPE: 0.4mm

ITEM NO.	Max Bundle Dia		" L " Length Approx		" W " Width Approx		Min Loop Tensile		Pkg. Qty.
	inch	mm	inch	mm	inch	mm	lbs	Kg	
STBCE-125S	0.8	20	5	125	.177	4.5	100	45.4	100
STBCE-152S	1.0	25	6	152					
STBCE-200S	2.0	50	8	200					
STBCE-250S	2.4	60	10	250					
STBCE-300S	3.0	75	12	300					
STBCE-360S	4.0	102	14	360					
STBCE-400S	4.3	108	16	400					
STBCE-500S	5.5	140	20	500					
STBCE-520S	6.0	152	20	520					
STBCE-680S	8.0	203	27	680					
STBCE-840S	10.0	254	33	840					
STBCE-1050S	12.5	318	41	1050					25
STBCE-152M	1.0	25	6	152	.315	8.0	250	113.4	50
STBCE-200M	2.0	50	8	200					
STBCE-250M	2.4	60	10	250					
STBCE-300M	3.0	75	12	300					
STBCE-360M	4.0	102	14	360					
STBCE-520M	6.0	152	20	520					
STBCE-680M	8.0	203	27	680					
STBCE-840M	10.0	254	33	840					
STBCE-1050M	12.5	318	41	1050					25
STBCE-290L	3.2	80	11	290	.472	12.0	595	270	25
STBCE-360L	4.0	102	14	360					
STBCE-430L	4.8	121	17	430					
STBCE-520L	6.0	152	20	520					
STBCE-600L	6.9	175	24	600					
STBCE-680L	8.0	203	27	680					
STBCE-750L	9.1	230	30	750					
STBCE-840L	10.0	254	33	840					
STBCE-910L	10.7	273	36	910					
STBCE-1000L	11.9	302	39	1000					10
STBCE-1070L	12.7	325	42	1070					
STBCE-1200L	13.8	351	47	1200					

STAINLESS STEEL TIE

STAINLESS STEEL TIE
(RELEASABLE TYPE WITH NYLON COATING)

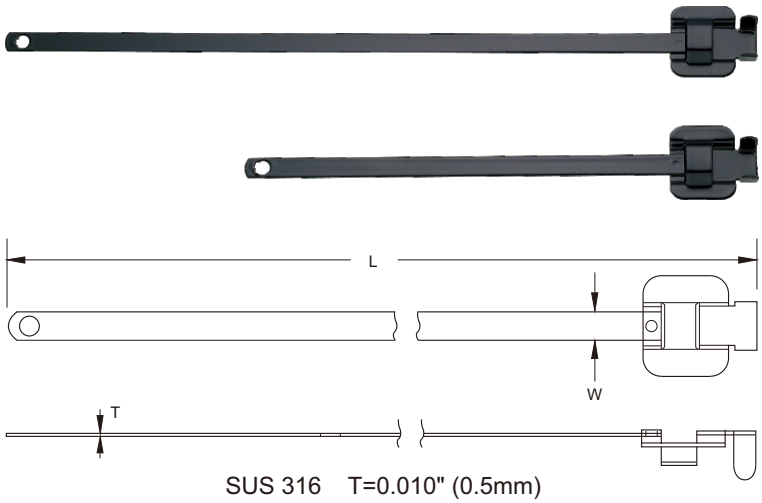

SUS 316 T=0.010" (0.5mm)
BLACK NYLON 11 COATING

ITEM NO.	Max Bundle Dia		" L " Length Approx		" W " Width Approx		Min Loop Tensile		Pkg. Qty.
	inch	mm	inch	mm	inch	mm	lbs	Kg	
STC-152S	1.5	38	6	152	0.248	6.3	300	136	100
STC-229S	2.5	63	9	229					
STC-305S	3.5	86	12	305					
STC-457S	5.4	137	18	457					
STC-610S	7.3	185	24	610					

STAINLESS STEEL TIE
(RATCHET TYPE)

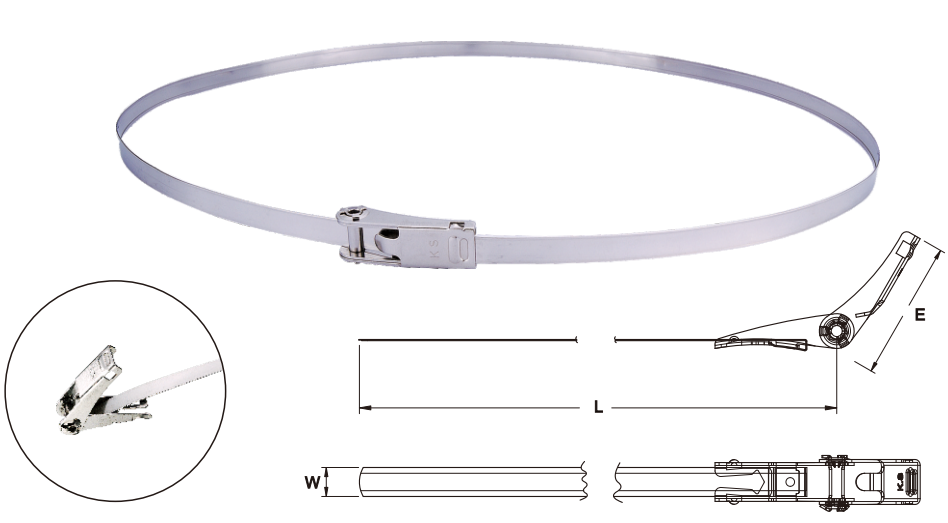

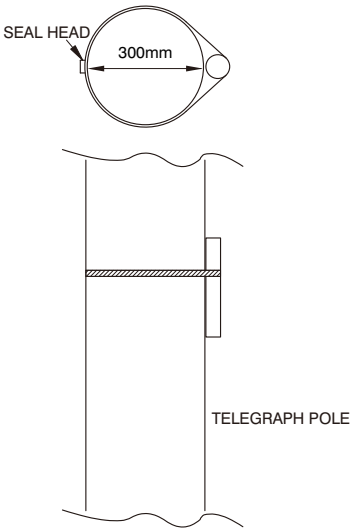

ITEM NO.	Max Bundle Dia		" L " Length Approx		" W " Width Approx		"E" Head Approx		Pkg. Qty.
	inch	mm	inch	mm	inch	mm	inch	mm	
STT-900	9.1	230	35.4	900	.394	10.0	1.900	48.0	10
STT-1100	11.8	300	43.3	1100	.394	10.0	1.900	48.0	10
STT-1315	15.0	380	51.7	1315	.394	10.0	1.900	48.0	10

STAINLESS STEEL TIE

MARKER PLATE

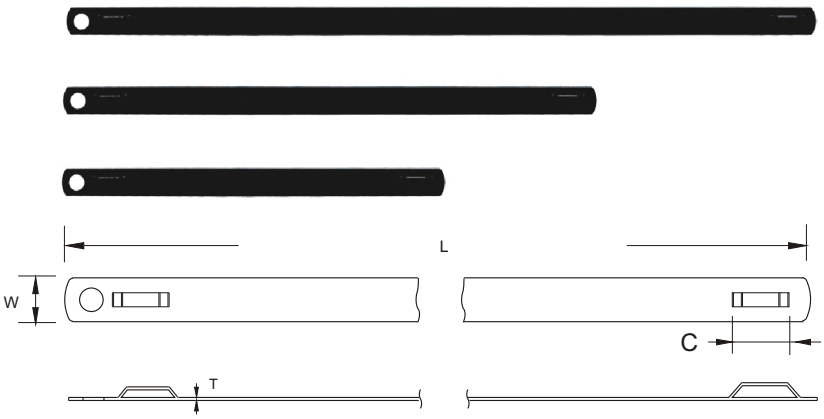

T=0.4mm
BLACK NYLON 11 COATING

ITEM NO.	L (mm)	W (mm)	C (mm)
SECPC-93	99	9.5	11.9
SECPC-131	137		
SECPC-188	194		

MARKER PLATE



T=0.4mm
BLACK EPOXY COATING

ITEM NO.	L (mm)	W (mm)	C (mm)
SECPCE-93	99	9.5	11.9
SECPCE-131	137		
SECPCE-188	194		

STAINLESS STEEL TIE

MARKER



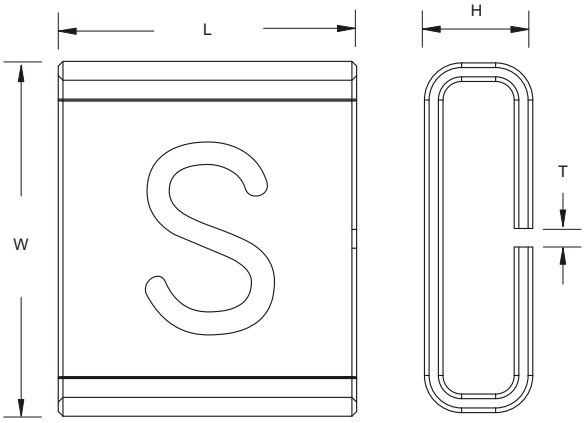

ITEM NO.		L (mm)	W (mm)	H (mm)	T (mm)
SEC-A	SEC-V	9.5	11.3	3.5	0.6
SEC-B	SEC-W				
SEC-C	SEC-X				
SEC-D	SEC-Y				
SEC-E	SEC-Z				
SEC-F	SEC-1				
SEC-G	SEC-2				
SEC-H	SEC-3				
SEC-I	SEC-4				
SEC-J	SEC-5				
SEC-K	SEC-6				
SEC-L	SEC-7				
SEC-M	SEC-8				
SEC-N	SEC-9				
SEC-O	SEC-BLANK				
SEC-P	SEC-PLUS(+)				
SEC-Q	SEC-MINUS(−)				
SEC-R	SEC-EARTH(±)				
SEC-S	SEC-SINE(~)				
SEC-T	SEC-SLASH(/)				
SEC-U	SEC-ARROW(←)				

KST™

Future Connection **K.S.TERMINALS INC.**

STAINLESS STEEL CABLE TIES





KST-STG200

STEEL TIE GUN

FOR TENSIONING
AND CUT OFF
BALL LOCK TYPE
AND LADDER TYPE
IN ALL SIZE OF WIDTH
UP TO 12mm.

