KST™

Future Connection

AC Charging Connector for Electric Vehicle

Since 1973

Professional Terminals and Connectors Supplier



Website : http://shinkwangtrade.com

General Charging Mode of IEC 61851

Type	Charging Mode	Power Supply	Breaker	Charging Power	Device	Charging Time (24KWh Battery)
Normal	Mode 1	230VAC, 1Ø	16A	3.3KW	Home Outlet	8h
	Mode 2	230VAC, 1Ø	32A	6.6KW	ICCB	4h
	Mode 3	230VAC, 3Ø	32A	12KW	AC EVSE	2h
Fast	Mode 4	500VDC	125A	50KW	DC EVSE	30min

※ Practical charging power and charging time depend on the adopted surface standard and battery capacity.

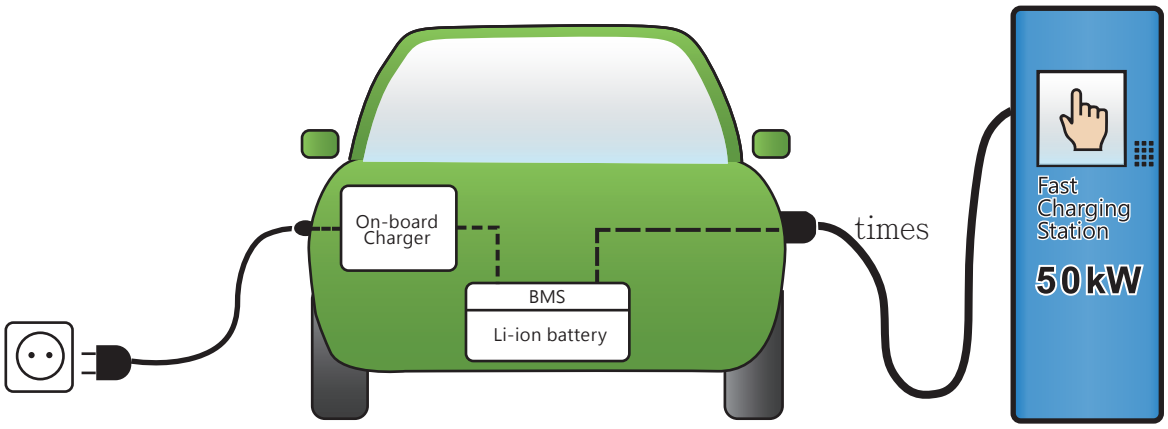

Normal Charging Mode (AC)

Fast Charging Mode (DC)

General Connection Type of IEC 61851

Case A: Permanent On-board Cable

Use the supply cable and plug permanently attached to EV.

A1 : Plug the supply cable into domestic or industrial socket.

A2 : Plug the supply cable into the charging station.

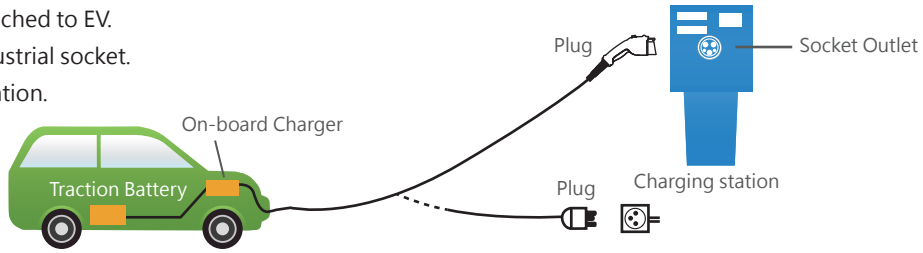

Case B: Portable Bilateral Plugs or Cord Set with ICCB

Use the detachable cable assembled with AC plug and EV connector.

B1 : Plug the supply cable into domestic or industrial socket.

B2 : Plug the supply cable into the charging station.

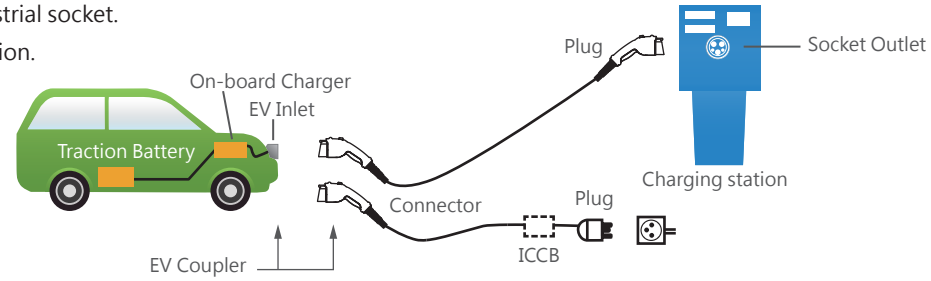

Case C: Permanent Cable attached to EVSE

Use the supply cable and vehicle connector permanently attached to EVSE.

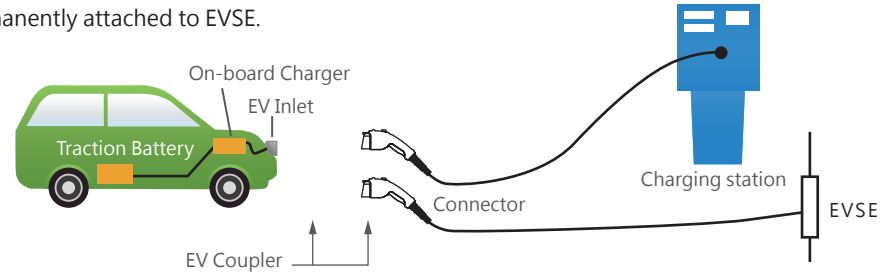

GB / T 20234

No.: CQC15029130897

AC Charging Connector **for Electric Vehicle** : GB / T 20234 Standard

VCCG2A032B0
VCCG2A016B0



Vehicle connector



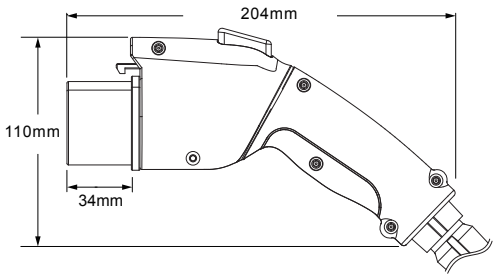



Features

- Conformity in surface design with GB / T 20234-2015.
- Ergonomic and streamlined designs allow for user-friendly interaction.
- High protection level to resist severe environment.
- Products passed 5000N driveover test.
- Applicable to Connection B and Connection C of IEC 61851.

Application

BEV, PHEV, charging pile, cord set and domestic wall-mounted charger, etc.
Charging mode : mode2 / mode3 ; Types of connection : Case B / Case C

Product Perimeter	Project	Specification
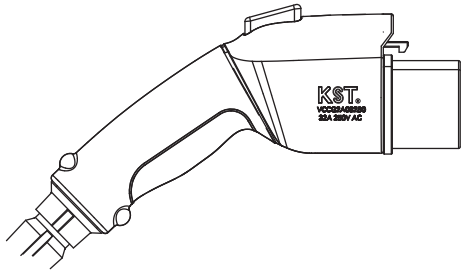	Vehicle Connector Color	White
	Reted Current	16A / 32A
	Reted Voltage	250V AC
	Force	≦ 100N
	Lifespan	≧ 10000 times
	Flammability Rating	UL 94V-0
	Protection Level	IP54
	Operating temperature	-30℃ ~ +50℃
	Main Material	PBT / PC / PA66 / Brass
	TATC Application No.	16A: QA16EE1EB0812 / QA16EF1EB0812 32A: QA16EE1EB0822 / QA16EF1EB0822

AC Charging Cable Spec.	Specification	Color	Standard
16A Cable	$3\times2.5mm^2+1\times0.75mm^2$	Black	CQC 1104 &
32A Cable	$3\times6.0mm^2+1\times0.75mm^2$	Black	KEMA-KEUR DEKRA K175-2

GB / T 20234

No.: CQC16029149670

AC Charging Connector **for Electric Vehicle** : GB / T 20234 Standard

VCCG2A032B1-GBC50-G0
VCCG2A016B1-GBC50-G0



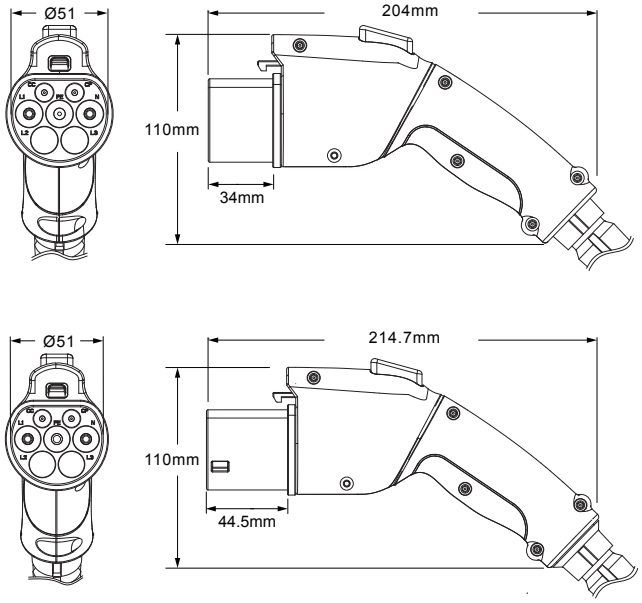

Features

- Conformity in surface design with GB / T 20234-2015.
- Ergonomic and streamlined designs allow for user-friendly interaction.
- High protection level to resist severe environment.
- Products passed 5000N driveover test.
- Applicable to Connection B of IEC 61851.

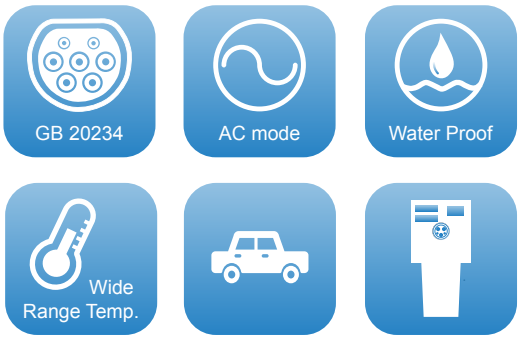

Application

For connecting BEV, PHEV and charging pile.

Types of connection : Case B

Product Perimeter	Project	Specification
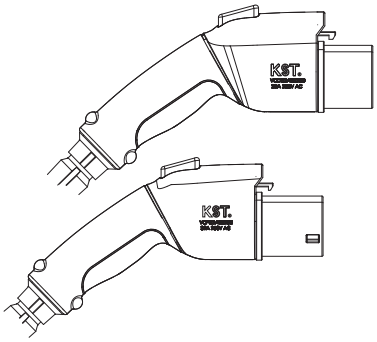	Vehicle Connector + Plug Color	White
	Reted Current	16A / 32A
	Reted Voltage	250V AC
	Force	≦ 100N
	Lifespan	≧ 10000 times
	Flammability Rating	UL 94V-0
	Protection Level	IP54
	Operating temperature	-30℃ ~ +50℃
	Main Material	PBT / PC / PA66 / Brass
	TATC Application No.	16A: QA16EE1EB0812 / QA16EF1EB0812
		32A: QA16EE1EB0822 / QA16EF1EB0822

AC Charging Cable Spec.	Specification	Color	Standard
16A Cable	3×2.5mm²+1×0.75mm²	Black	CQC 1104 &
32A Cable	3×6.0mm²+1×0.75mm²	Black	KEMA-KEUR DEKRA K175-2

GB / T 20234

No.: CQC15029130897

AC Charging Connector **for Electric Vehicle** : GB / T 20234 Standard

VCIG2A032B0
VCIG2A016B0



Vehicle inlet

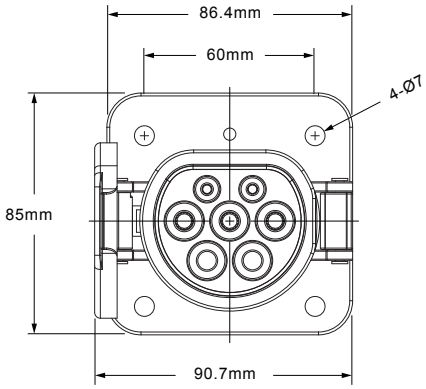

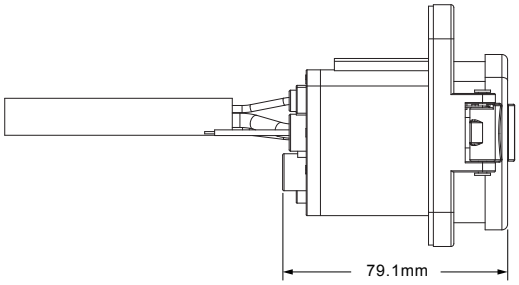

GB 20234 | AC mode | Water Proof | Dust Proof | Wide Range Temp.

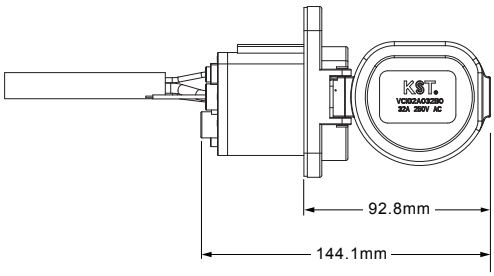

Features

- Conformity in surface design with GB / T 20234-2015.
- Temperature detecting function.
- High protection level to resist severe environment.
- Applicable to Connection B and Connection C of IEC 61851.

Application

BEV, PHEV, etc.

Types of connection : Case B / Case C

Product Perimeter	Project	Specification
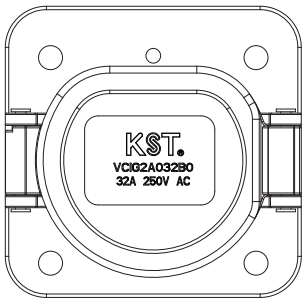	Vehicle inlet Color	Black
	Reted Current	16A / 32A
	Reted Voltage	250V AC
	Lifespan	≧ 10000 times
	Flammability Rating	UL 94V-0
	Protection Level	IP54
	Operating temperature	-30℃ ~ +50℃
	Main Material	PBT / PC / Brass
	Temperature detecting range	-30℃ ~ +150℃
	TATC Application No.	16A: QA16EE1EB0812 / QA16EF1EB0812 32A: QA16EE1EB0822 / QA16EF1EB0822

AC Charging Cable Spec.	Specification	Color	Standard
16A Cable	$3\times2.5mm^2+2\times0.75mm^2$	Black	CQC 1104 &
32A Cable	$3\times6.0mm^2+2\times0.75mm^2$	Black	KEMA-KEUR DEKRA K175-2

GB / T 20234

No.: CQC16029148023

AC Charging Connector **for Electric Vehicle** : GB / T 20234 Standard

VCSG2A032B0
VCSG2A016B0



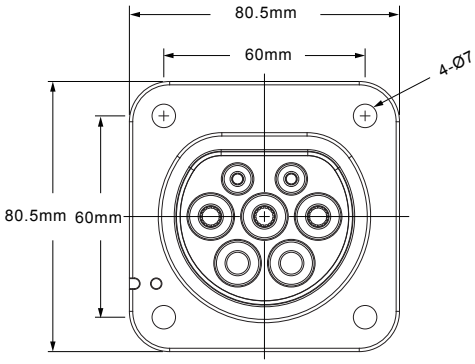

Socket

GB 20234 | AC mode | Water Proof | Dust Proof | Wide Range Temp.

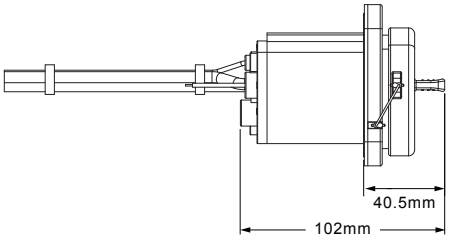

Features

- Conformity in surface design with GB / T 20234-2015.
- Temperature detecting function.
- High protection level to resist severe environment.
- Applicable to Connection A and Connection B of IEC 61851.

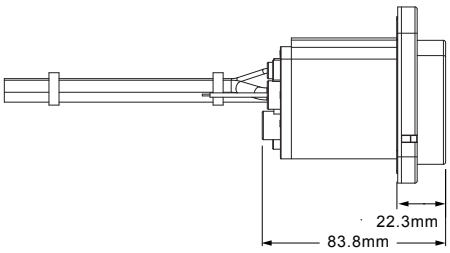

Application

EVSE, charging pile and domestic wall-mounted charger, etc.
Charging mode : mode3 ; Types of connection : Case A / Case B

Product Perimeter	Project	Specification
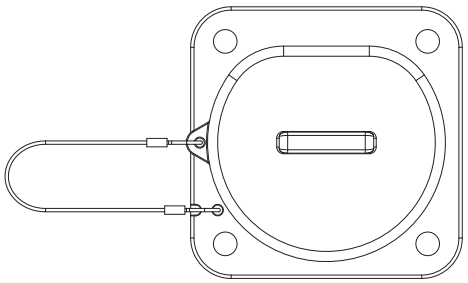	Socket Color	Black
	Reted Current	16A / 32A
	Reted Voltage	250V AC
	Lifespan	≧ 10000 times
	Flammability Rating	UL 94V-0
	Protection Level	IP54
	Operating temperature	-30℃ ~ +50℃
	Main Material	PBT / PC / Brass
	Temperature detecting range	-30℃ ~ +150℃
	TATC Application No.	16A: QA16EE1EB0812 / QA16EF1EB0812 32A: QA16EE1EB0822 / QA16EF1EB0822

AC Charging Wire Spec.	Specification	Equal Standard
16A Wire	$2\times2.5mm^2+1\times4.0mm^2+2\times0.75mm^2$	CQC 1104 &
32A Wire	$2\times6.0mm^2+1\times10mm^2+2\times0.75mm^2$	KEMA-KEUR DEKRA K175-2

GB / T 20234

No.: CQC16029148023

AC Charging Connector **for Electric Vehicle** : GB / T 20234 Standard

VCSG2A032C0
VCSG2A016C0



Socket

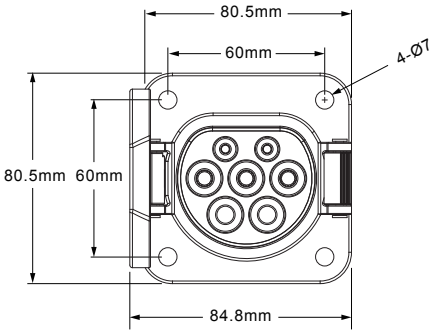

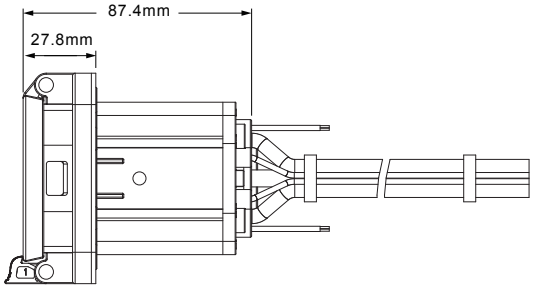

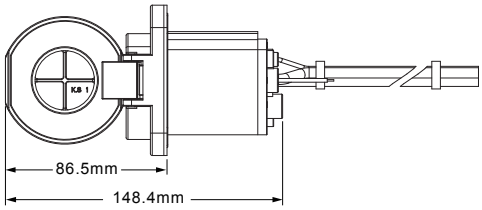

GB 20234 | AC mode | Water Proof | Dust Proof | Wide Range Temp.

Features

- Conformity in surface design with GB / T 20234-2015.
- Temperature detecting function.
- High protection level to resist severe environment.
- Applicable to Connection A and Connection B of IEC 61851.

Application

EVSE, charging pile and domestic wall-mounted charger, etc.
Charging mode : mode3 ; Types of connection : Case A / Case B

Product Perimeter	Project	Specification
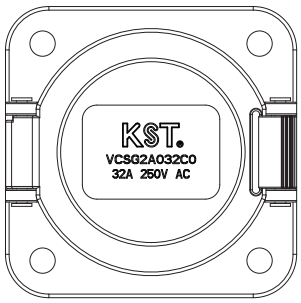	Socket Color	Black
	Reted Current	16A / 32A
	Reted Voltage	250V AC
	Lifespan	≧ 10000 times
	Flammability Rating	UL 94V-0
	Protection Level	IP54
	Operating temperature	-30℃ ~ +50℃
	Main Material	PBT / PC / Brass
	Temperature detecting range	-30℃ ~ +150℃
	TATC Application No.	16A: QA16EE1EB0812 / QA16EF1EB0812 32A: QA16EE1EB0822 / QA16EF1EB0822

AC Charging Wire Spec.	Specification	Equal Standard
16A Wire	$2\times2.5mm^2+1\times4.0mm^2+2\times0.75mm^2$	CQC 1104 &
32A Wire	$2\times6.0mm^2+1\times10mm^2+2\times0.75mm^2$	KEMA-KEUR DEKRA K175-2

GB / T 20234

No.: CQC16029148023

AC Charging Connector **for Electric Vehicle** : GB / T 20234 Standard

VCSG2A032D0
VCSG2A016D0



Socket

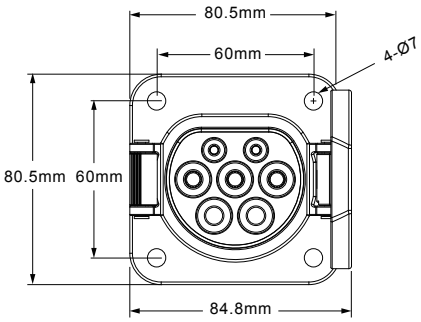

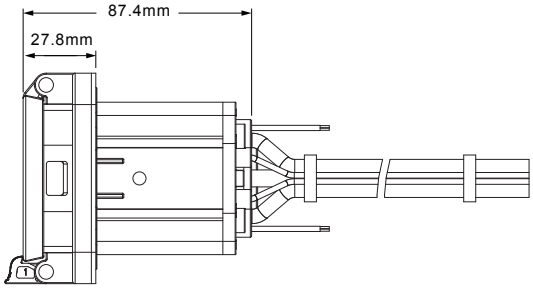

GB 20234 | AC mode | Water Proof | Dust Proof | Wide Range Temp.

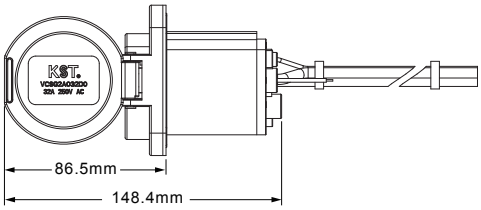

Features

- Conformity in surface design with GB / T 20234-2015.
- Temperature detecting function.
- High protection level to resist severe environment.
- Applicable to Connection A and Connection B of IEC 61851.

Application

EVSE, charging pile and domestic wall-mounted charger, etc.
Charging mode : mode3 ; Types of connection : Case A / Case B

Product Perimeter	Project	Specification
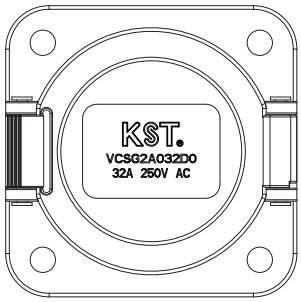	Socket Color	Black
	Reted Current	16A / 32A
	Reted Voltage	250V AC
	Lifespan	≧ 10000 times
	Flammability Rating	UL 94V-0
	Protection Level	IP54
	Operating temperature	-30℃ ~ +50℃
	Main Material	PBT / PC / Brass
	Temperature detecting range	-30℃ ~ +150℃
	TATC Application No.	16A: QA16EE1EB0812 / QA16EF1EB0812 32A: QA16EE1EB0822 / QA16EF1EB0822

AC Charging Wire Spec.	Specification	Equal Standard
16A Wire	$2\times2.5mm^2+1\times4.0mm^2+2\times0.75mm^2$	CQC 1104 &
32A Wire	$2\times6.0mm^2+1\times10mm^2+2\times0.75mm^2$	KEMA-KEUR DEKRA K175-2

GB / T 20234

Electronic Locking Solenoid **For Vehicle Inlet**

VCELG-H12SA0-00

Application

Project	Specification
Reted Current	3A
Reted Voltage	DC 12V
Estimated Life	≧ 10000 times
Operating temperature	-30℃ ~ +50℃



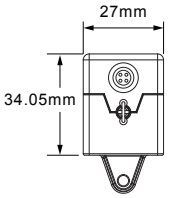

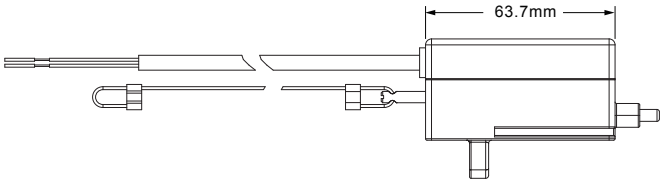

GB / T 20234

Electronic Locking Solenoid **For Socket**

VCELG-V12SA0-00

Application

Project	Specification
Reted Current	3A
Reted Voltage	DC 12V
Estimated Life	≧ 10000 times
Operating temperature	-30℃ ~ +50℃

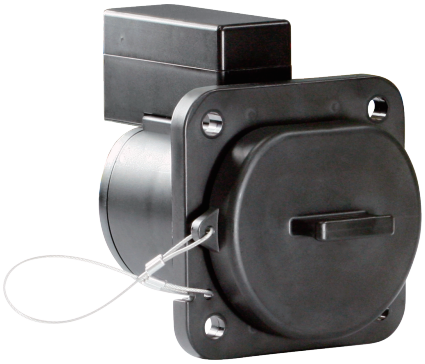

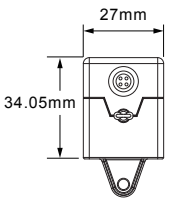

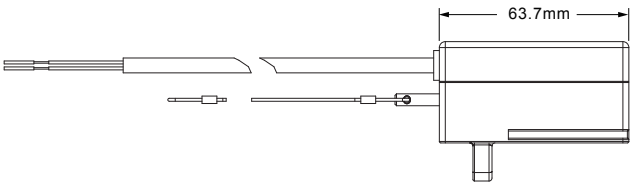

IEC 62196

TÜVRheinland®

AC Charging Connector **for Electric Vehicle** : IEC 62196-2 Type1 & SAE J1772 Standard

VCPS2A / VCSS2A



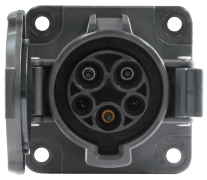

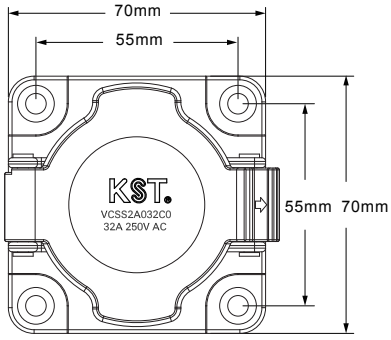

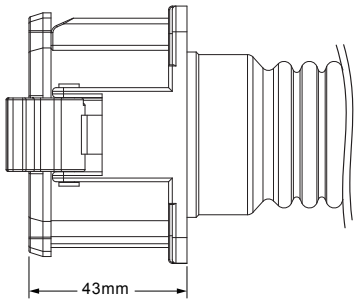

SAE J1772 | AC mode | Water Proof | Dust Proof | Wide Range Temp.

Features

- Conformity in surface design with IEC 62196-2 Type1 , as well as product test accordance with IEC 62196-1 & IEC 62196-2.
- Ergonomic and streamlined designs allow for user-friendly interaction.
- High level of protection against severe environment.
- Products passed 5000N driveover test.
- Applicable to Connection B and Connection C of IEC 61851.
- Certificated by TUV.

Application

BEV, PHEV, charging pile, cord set and domestic wall-mounted charger, etc.

Product Perimeter

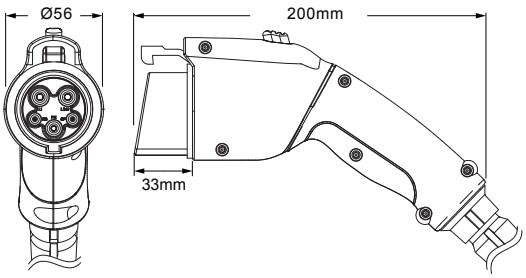

Project	Specification
Plug Color	White
Reted Current	16A / 32A
Reted Voltage	250V AC
Force	≦ 100N
Lifespan	≧ 10000 times
Flammability Rating	UL 94V-0
Protection Level	≧ IP44
Operating temperature	-30℃ ~ +50℃
Main Material	PBT / PC / PA66 / Copper Alloy
TUV Certificate NO.	R 50268463

AC Charging Cable Spec.	Specification	Color	Standard
16A Cable	3×2.5mm²+2×0.5mm²	Black	2Pfg1908
32A Cable	3×6.0mm²+2×0.5mm²	Black	2Pfg1908

UL 2251

AC Charging Connector **for Electric Vehicle**：SAE J1772 Standard

VCPU2A / VCSU2A



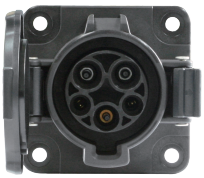

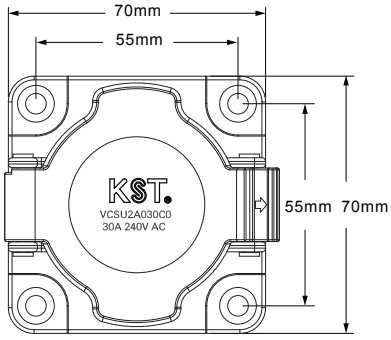

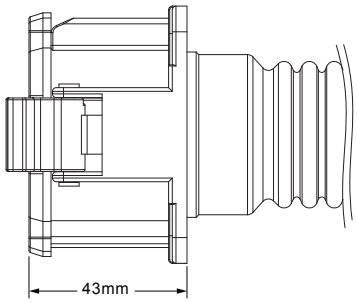



Features

- Conformity in surface design with SAE J1772, as well as product test accordance with UL 2251.
- Ergonomic and streamlined designs allow for user-friendly interaction.
- High level of protection against severe environment.
- Products passed 5000N driveover test.
- Applicable to Connection B and Connection C of IEC 61851.

Application

BEV, PHEV, charging pile, cord set and domestic wall-mounted charger, etc.

Product Perimeter	Project	Specification
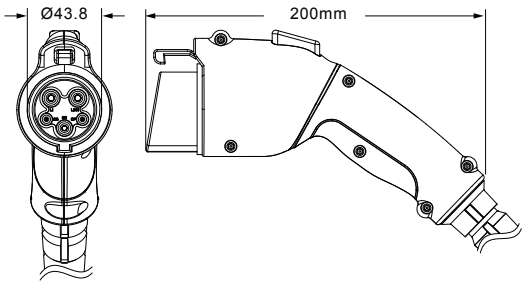	Plug Color	White
	Reted Current	15A / 30A
	Reted Voltage	240V AC
	Lifespan	≧ 10000 times
	Flammability Rating	UL 94V-0
	Protection Level	UL 50E 3R
	Operating temperature	-30℃ ~ +50℃
	Main Material	PBT / PC / PA66 / Copper Alloy

AC Charging Cable Spec.	Specification	Color	Standard
15A Cable	3×14AWG+2×20AWG	Black	UL62
30A Cable	3×10AWG+2×20AWG	Black	UL62

CNS 15511

AC Charging Connector **for Electric Vehicle**：CNS 15511 & SAE J1772 Standard

VCPC2A / VCSC2A



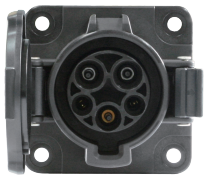

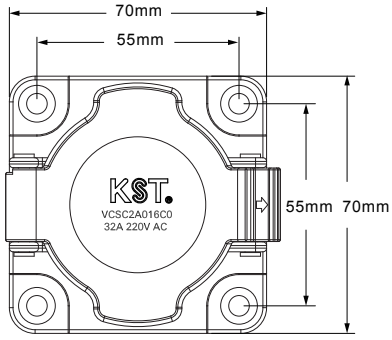

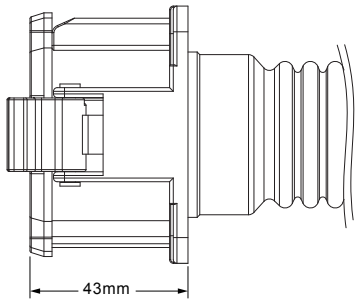

SAE J1772 | AC mode | Water Proof | Dust Proof | Wide Range Temp.

Features

- Conformity in surface design with SAE J1772, as well as product test accordance with CNS15511.
- Ergonomic and streamlined designs allow for user-friendly interaction.
- High level of protection against severe environment.
- Products passed 5000N driveover test.
- Applicable to Connection B and Connection C of IEC 61851.
- Certificated by Electronics Testing Center (ETC), Taiwan.

Application

BEV, PHEV, charging pile, cord set and domestic wall-mounted charger, etc.

Product Perimeter	Project	Specification
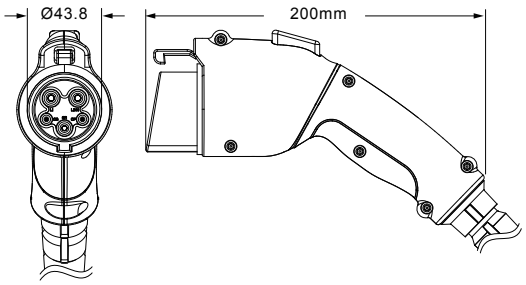	Plug Color	White
	Reted Current	16A / 32A
	Reted Voltage	220V AC
	Force	≦ 80N
	Lifespan	≧ 10000 times
	Flammability Rating	UL 94V-0
	Protection Level	≧ IP44
	Operating temperature	-30℃ ~ +50℃
	Main Material	PBT / PC / PA66 / Copper Alloy
	ETC Application NO.	14-08-VAF-013 / 14-08-VAF-014

AC Charging Cable Spec.	Specification	Color	Standard
16A Cable	3×14AWG+2×20AWG	Black	UL62
32A Cable	3×10AWG+2×20AWG	Black	UL62

IEC 62196

TÜVRheinland®

AC Charging Connector **for Electric Vehicle**：IEC 62196-2 Type2 Standard

VCSI2A / VCSICA



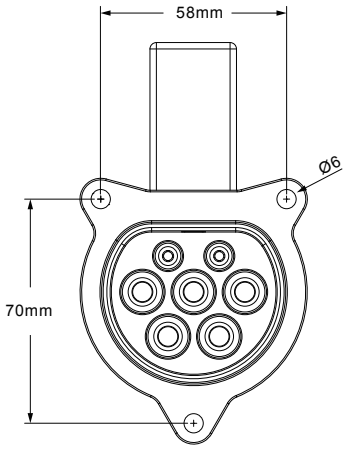

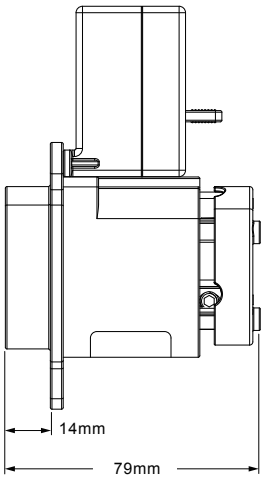



Features

- Conformity in surface design with IEC 62196-2 Type 2 as well as product test accordance with IEC 62196-1 & IEC 62196-2.
- Applicable in both single-phase and three-phrase electric system.
- Exclusive magnetic lock with high speed connection for an extended lifespan.
- Applicable to Connection A and Connection B of IEC 61851.
- Certificated by TUV.

Application

Charging pile

Product Perimeter	Project	Specification
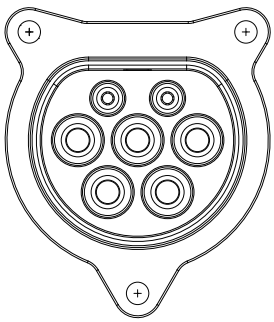	Plug Color	Black
	Reted Current	32A
	Reted Voltage	250V AC (Single-Phase) 250V / 480V AC (Three-Phase)
	Force	≦ 100N
	Lifespan	≧ 10000 times
	Flammability Rating	UL 94V-0
	Operating temperature	-30℃ ~ +50℃
	Main Material	PBT / PC / Copper / Copper Alloy
	TUV Certificate NO.	R 50302730

Application in EV Charging System

- Supply Cable with Bilateral Plugs



- Cord Set



- Charging Pile



- Domestic wall-mounted charger



- On-Board Inlet



- Charging Stations/Parking



KST™
Future Connection

Website : http://shinkwangtrade.com







SHINKWANG TRADE CO.
서울특별시 강남구 삼성동 159-1 한국종합무역센타 30층 3001호
MAIL : sinkwang2000@naver.com
TEL : 02-551-3026 / FAX : 02-551-3100, 3200
H.P : 010-3366-5847

B009A2-EN