KST™

Future Connection

Since 1973

Automotive Connectors

Professional Terminals and Connectors Supplier



IECQ Certificate No.
IECQ-H SGSTW 10.0003

IECQ Certificate No.
IECQ-L ULTW 09.0008

INDEX

01-06

MAP OF PART NUMBERING SYSTEM ..... 產品編碼原則 07-08

025 SERIES

025 JSTC JWPF SERIES .....  10-12

025 JAEC AG5 SERIES .....  13-14

025 MX DUAL-ROW SERIES .....  15-16

025 JSTC WPZ SERIES .....  17-19

025 JSTC XH SERIES .....  20-21

025 AM MQS SERIES .....  22-23

025 RS .....  24-25

030 SERIES

030 RS .....  28-30

030 YK 91A SERIES .....  31-32

040 SERIES

040 YK 1.0 III SERIES .....  34-35

040 JAEC MX23A SERIES .....  36-37

040 KST ECU SERIES .....  38-39

040 SMTO DL SERIES .....  40-41

040 SMTO HX SERIES .....  42-44

040 AM MULT SERIES .....  45-46

040 AM MULT I/O SERIES .....  47-48

040 SERIES .....  49-51

KST™ Future Connection

K.S. TERMINALS INC.

INDEX

01-06

040 DF M-PARK SERIES  52-53

050 SERIES

050 YK SP SERIES  56-57

050 YK SSD SERIES  58-60

050 RS DEW SERIES  61-62

050 TYPE SERIES  63-64

060 SERIES

060 AM SPECIALSEAL 1.5 SERIES  66-69

060 AM POWER DOUBLE LOCK SERIES  70-71

060 YK 2.8 SERIES  72-73

060 YK 1.5 SERIES  74-75

060 SMTO SWP SERIES  76-77

060 SMTO SL SERIES  78-79

060 AM M-TIMER2 SERIES  80-81

060 DF M-PACK 150 SERIES 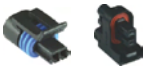 82-85

070 SERIES

070 AM EJ-II SERIES  88-93

070 AM MULTILOCK SERIES  94-96

070 MX VB WIRE-TO-WIRE SYSTEM  97-100

070 YK SDL SERIES  101-102

070 RS  103-104

INDEX

01-06

090 SERIES

090 SMTO MT SERIES .....  106-111

090 SMTO HM SERIES .....  112-115

090 KST JOINT SERIES .....  116-117

090 SMTO DL SERIES .....  118-120

090 FRKW FW SERIES .....  121-125

090 SMTO FUEL PUMP SERIES .....  126-127

090 RS NMWP SERIES .....  128-129

090 CONNECTOR .....  130-131

090 YK 2.3II (090II) .....  132-133

090 KST B TYPE SERIES .....  134-135

090 SMTO TS、DL、SL SERIES .....  136-137

090 SMTO TS SERIES .....  138-139

090 SMTO 91RS SERIES .....  140-141

090 TYPE .....  142-143

110 SERIES

110 ML SERIES .....  146-148

110 AM JUNIOR TIMER CANTACT .....  149-150

110 DF GT 280 SERIES .....  151-152

110 AM JUNIOR TIMER CANTACT .....  153-154

110 SERIES TERMINALS .....  155-158

INDEX

01-06

118 SERIES

118 KETC MULTIPLE INTERLOCK SERIES .....  160-161

118 SERIES .....  162-163

187 SERIES

187 SMTO TS SERIES .....   166-168

187 KETC HYBRID SERIES .....   169-171

187 KETC WP II SERIES .....   172-173

187 AM STANDARD POWER TIMER .....   174-176

187 VR2 .....   177-178

187 SERIES .....  179-182

205 SERIES

205 KST .....   184-186

205 SERIES .....  187-189

250 SERIES

250 AM EJ-II SERIES .....   192-193

250 YK WPC SERIES .....   194-196

250 STANDARD TYPE .....   197-199

250 RB SERIES .....   200-202

250 AM FASTIN-FASTON .....   203-205

250 KST .....   206-207

250 EV SERIES .....   208-209

INDEX

01-06

250 AM POSITIVE LOCK .....  210-211

250 DF 56 SERIES .....  212-215

250 SERIES .....  216-224

250 SERIES TERMINALS .....  225-227

250 FLAG SERIES .....  228-230

250 SERIES HOUSINGS .....  231-232

312 SERIES

312 AUTOMOBILE LIGHTING SERIES .....  234-243

312 SERIES .....  244-245

375 SERIES

375 AM MAXI POWER TIMER .....  248-250

375 SERIES .....  251-252

OTHERS

0.93 (2.36) AM PIN AND SOCKET CONNECTORS .....  254-257

0.93 (2.36) AM PIN AND SOCKET CONNECTORS II .....  258-260

0.84 (2.13) MX PIN AND SOCKET .....  261-263

0.93 (2.36) KST PIN AND SOCKET .....  264-266

0.125 (3.18) KST PIN AND SOCKET .....  267-268

0.6 (1.5) DT PIN TYPE SOCKET .....  269-270

JSTC EL TERMINALS .....  271-272

SMTO .....  273-274

INDEX

		01-06
SMTO AUTO FUSE SERIES		275-276
KST AUTO FUSE SERIES		277-278
AUTOMOBILE FUSE SERIES		279-280
BULLET TERMINAL		281-283
RING TONGUE TERMINALS		284-286
SQUARE TERMINALS		
SPADE TONGUE TERMINALS		288
SPLICE TERMINALS		288
PCB TERMINAL		289
BATTERY SERIES		290-294
LIGHTING SERIES		295-299
LIGHT SOCKETS		300
OTHER	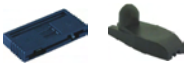	301-308

A. AUTOMOTIVE TERMINALS & CONNECTORS RELATED
汽車端子及連接器

MAP OF PART NUMBERING SYSTEM 產品編碼原則

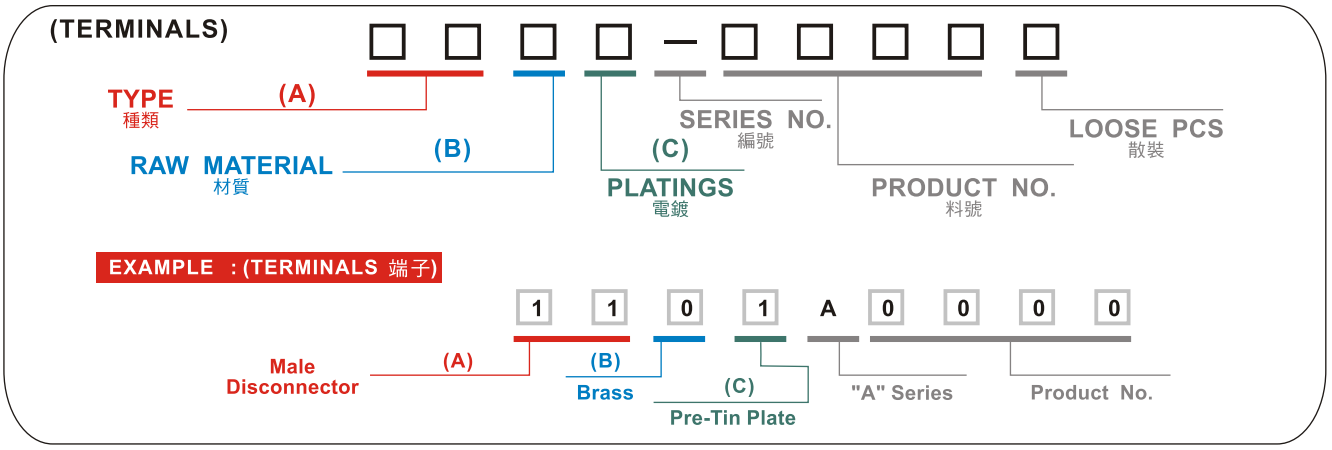

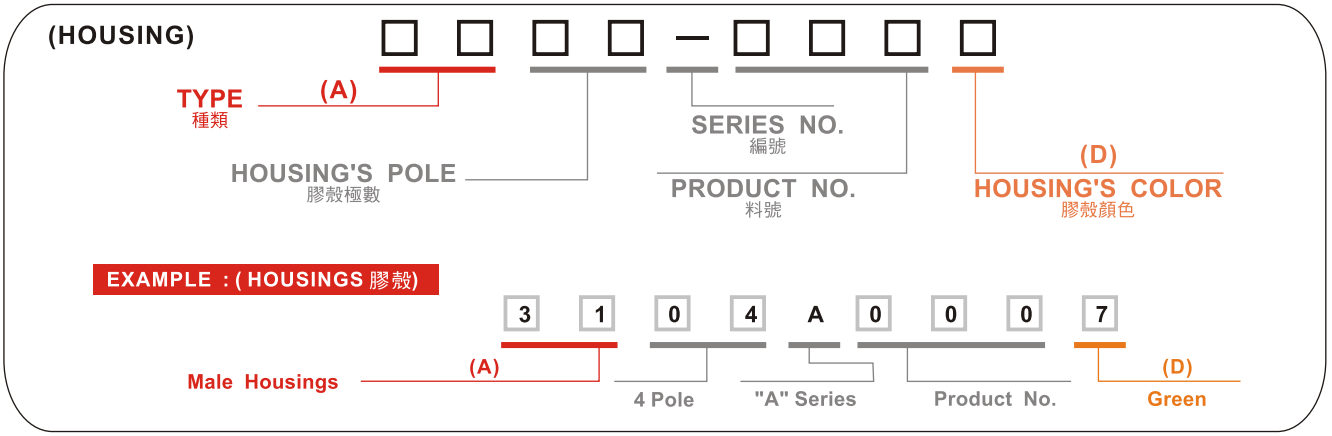

(A) TYPE

TYPE 種類		CODE 代碼
Male & Female Terminals	公母共用端子	10
Male Terminals	公端子	11
Female Terminals	母端子	12
Male & Female Housings	公母共用膠殼	30
Male Housings	公插膠殼	31
Female Housings	母插膠殼	32
Male Housing Double Lock	公端塑膠雙重扣卡	36
Female Housing Double Lock	母端塑膠雙重扣卡	37
Male & Female Housing Double Lock	公母共用端塑膠雙重扣卡	42
Rubber Seal	防水栓	70
PCB Socket	PCB插座	80
Special Products	特殊物件	99

(C) PLATINGS

PLATINGS 電鍍處理		CODE 代碼
None	素材	0
Pre-Tin	預鍍錫	1
Pre-nickel-gold	預鍍鎳金	3
Tin	後鍍錫	5
Nickel-gold	後鍍鎳金	6

(B) RAW MATERIAL

RAW MATERIAL 材質		CODE 代碼
Brass	黃銅	0
Copper Alloy	銅合金	1
Phosphor Bronze	磷青銅	2
Beryllium Copper	鈹銅	3
Copper	紅銅	4
Stainless Steel	不繡鋼	5
Fe	鐵	6

(D) HOUSING'S COLOR

HOUSING'S COLOR 膠殼顏色		CODE 代碼
Natural	自然色	1
Black	黑色	2
Yellow	黃色	3
White	白色	4
Red	紅色	5
Blue	藍色	6
Green	綠色	7
Orange	橙色	8
Grey	灰色	9
Brown	棕色	0

B. OTHERS TERMINALS & CONNECTORS
其它類端子及連接器

MAP OF PART NUMBERING SYSTEM 產品編碼原則

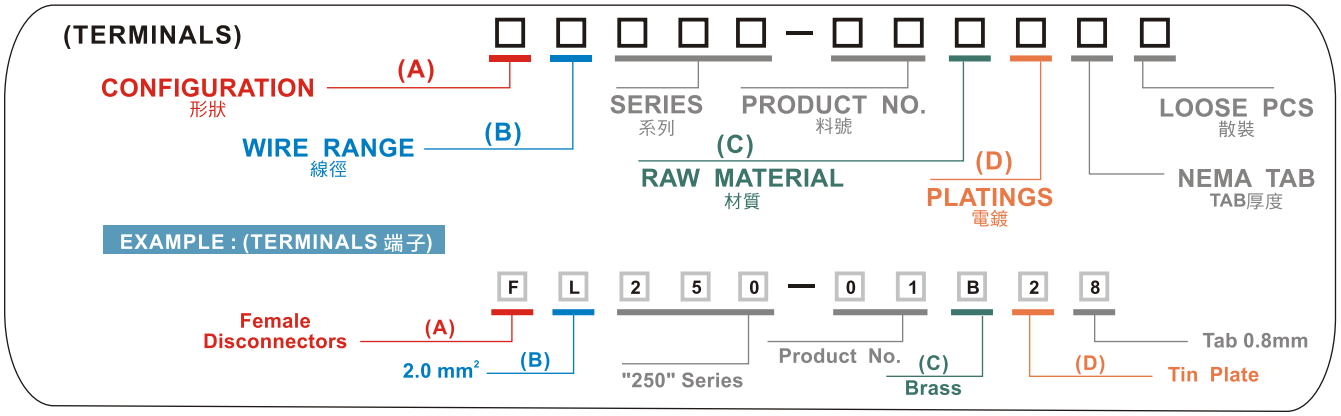

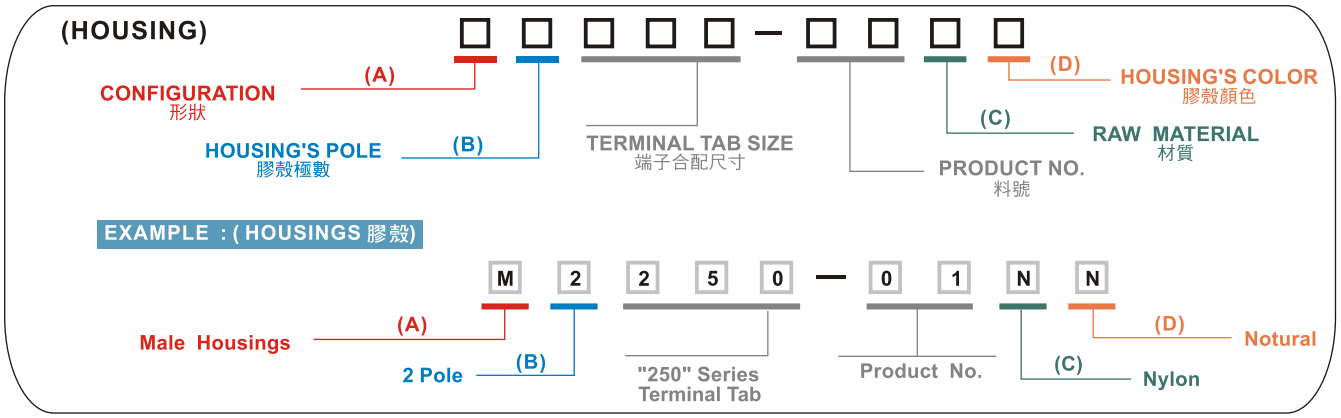

(A) CONFIGURATION

CONFIGURATION 型狀			CODE 代碼
Blade Terminals	刀片型	Terminals	B
Ring Terminals	圓型		R
Spade Terminals	Y型		S
Pin Terminals	針型		P
Female Disconnectors	母端型		F
Male Disconnectors	公端型		M
Lighting Terminals	燈座型		L
Flag Terminals	旗型		G
Special Terminals	特殊型		N
Female Housing	母膠殼	Housings	F
Male Housing	公膠殼		M
Special or Femalen + Male	特殊或公母共用		N

(B) WIRE RANGE & HOUSING'S POLE

WIRE RANGE 電線範圍			CODE 代碼
22-20 A.W.G.	0.3-0.5mm²	Terminals	S
18-16 A.W.G.	0.85-1.25mm²		M
14 A.W.G.	2.0mm²		L
10 A.W.G.	5.0-6.0mm²		J
8 A.W.G.	8mm²		Q
6 A.W.G.	14mm²		K

POLE 極數			CODE 代碼
1	Pole	Housings	1
2	Pole		2
⋮	Pole		⋮
99	Pole		99

(C) RAW MATERIAL

RAW MATERIAL 材質			CODE 代碼
Brass	黃銅	Terminals	B
Phosphor Bronze	磷青銅		P
Copper	紅銅		C
Copper Alloys	銅合金		K
Beryllium Copper	鈹		E
Fe	鐵		F
Stainless steel	不繡鋼		S
NYLON	塑膠原料	Housings	N
PC	塑膠原料		C
PBT	塑膠原料		B
PVC	塑膠原料		V
PP	塑膠原料		P
ABS	塑膠原料		A
POM	塑膠原料		M
PE	塑膠原料		E
NBR	塑膠原料		R
SILICONE	塑膠原料		S

(D) PLATINGS & HOUSING'S COLOR

PLATINGS 電鍍處理		CODE 代碼
Chemical Polishing	化學研磨	1
Tin	鍍錫	2
Nickel	鍍鎳	3
Nickel-gold	鎳金	6
Silver	鍍銀	7
Copper	鍍銅	8
None	素材	9
Pre-Tin	預鍍錫	T
Pre-Nickel	預鍍鎳	N

COLOR 顏色		CODE 代碼	COLOR 顏色		COLOR 顏色
Blue	藍色	B	Green	綠 色	G
Red	紅色	R	Orange	橙 色	A
Yellow	黃色	Y	Grey	灰 色	E
White	白色	W	Brown	棕 色	C
Black	黑色	K	Natural	自然色	N

025 SERIES

AUTOMOTIVE CONNECTORS



025 JSTC
JWPF SERIES
SEALED

CONSTRUCTION

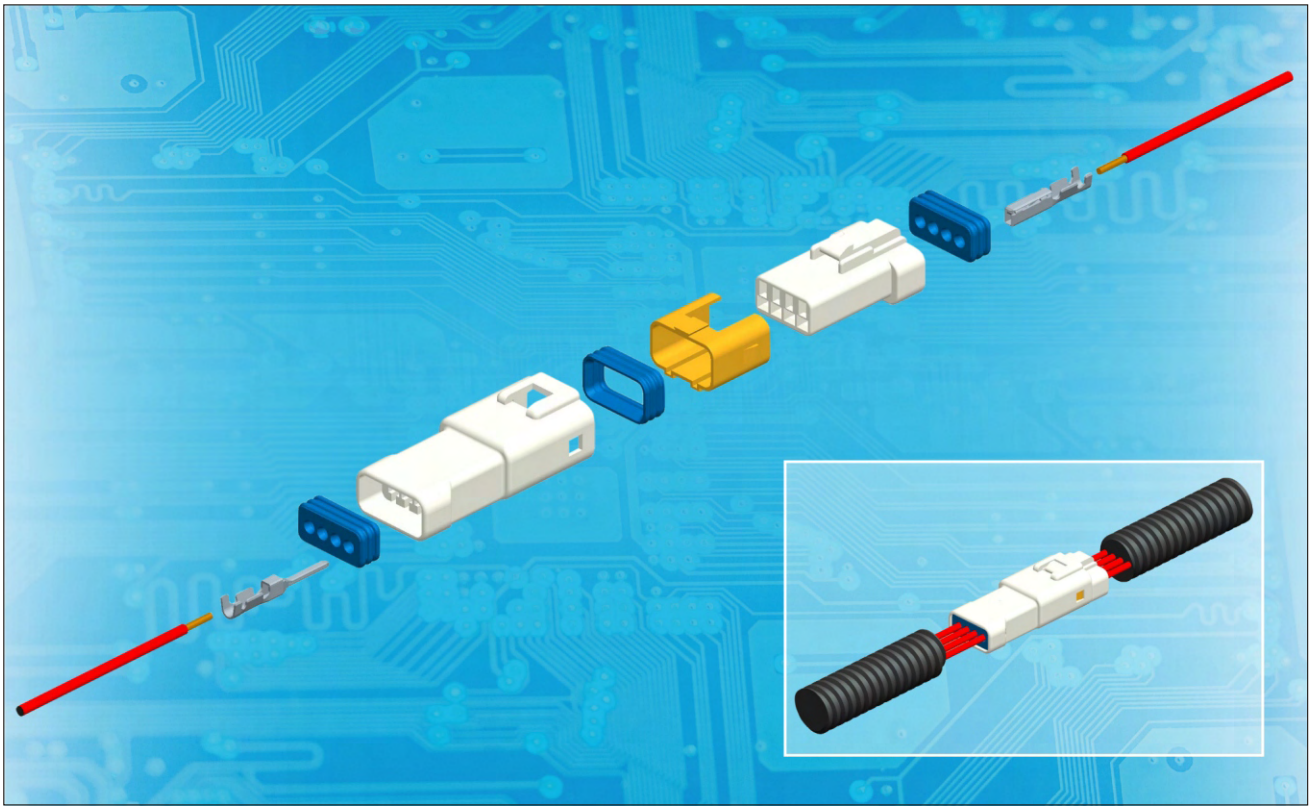

SPECIFICATIONS

Material	Connector	PBT
	Male Terminal	BRASS
	Female Terminal	COPPER ALLOY
Operating Temperature Range		-40°C~+85°C
Voltage Drop		5mV/A
Isolation Resistance		800MΩ
Dielectric Resistance		1000V
Applicable Wire Size		0.13mm² ~0.33mm² (26 AWG~22 AWG)
Maximum Electric Current		3A

025 JSTC
JWPF SERIES
SEALED

TERMINAL

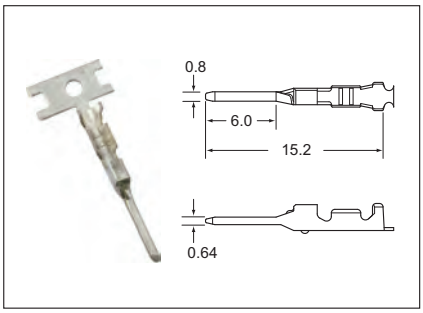

ITEM NO.	WIRE RANGE		MATERIAL	PLATINGS	Q'TY	APPLICATOR	DIES
	A.W.G.	mm²			REEL		
1101A1000	26-22	0.13-0.33	Brass	Pre-Tin	8000	CDM-98048-S	CDT-9805-S

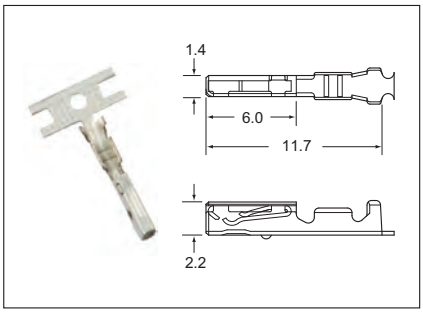

ITEM NO.	WIRE RANGE		MATERIAL	PLATINGS	Q'TY	APPLICATOR	DIES
	A.W.G.	mm²			REEL		
1211A1000	26-22	0.13-0.33	Copper Alloy	Pre-Tin	8000	CDM-98048-S	CDT-9806-S

HOUSING

POLE	MALE	FEMALE
2	**3102A1004**  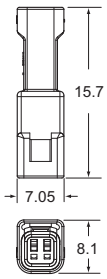 **100 PCS**	**3202A1004**  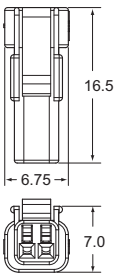 **500 PCS**
3	**3103A1004**  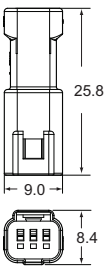 **100 PCS**	**3203A1004**  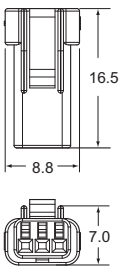 **100 PCS**

• HOUSING (UNIT:mm)
MATERIAL:PBT
COLOR:WHITE

025 JSTC
JWPF SERIES
SEALED

HOUSING

POLE	MALE	FEMALE
4	**3104A1004**  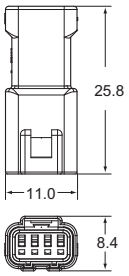 **100 PCS**	**3204A1004**  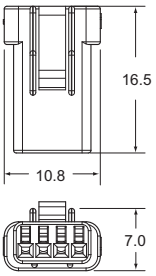 **100 PCS**
8	**3108A1004**  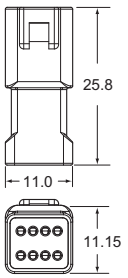 **100 PCS**	**3208A1004**  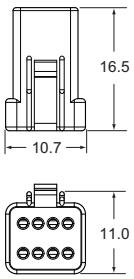 **100 PCS**

• HOUSING (UNIT:mm)
MATERIAL:PBT
COLOR:WHITE

025 JAEC
AG5 SERIES
UNSEALED

SPECIFICATIONS

Material	Connector	PBT
	Male Terminal	-
	Female Terminal	PHOSPHOR BRONZE
Operating Temperature Range		-40°C~+85°C
Voltage Drop		10mV/A
Isolation Resistance		100MΩ
Dielectric Resistance		1000V
Applicable Wire Size		0.3mm^2 ~0.85mm^2 (22 AWG~18 AWG)
Maximum Electric Current		7A

025 JAEC
AG5 SERIES
UNSEALED

TERMINAL

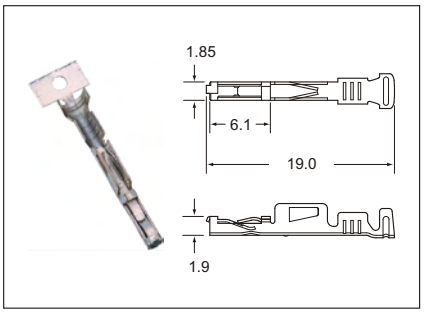

ITEM NO.	WIRE RANGE		MATERIAL	PLATINGS	Q'TY	APPLICATOR	DIES
	A.W.G.	mm^2			REEL		
1211A0076	22-18	0.3-0.85	Phosphor Bronze	Pre-Tin	5000	CDM-95014-M	CDT-95014-M

HOUSING

POLE		FEMALE
10		**3210A0057**  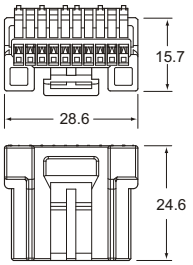 **100 PCS**

• HOUSING (UNIT:mm)
MATERIAL:PBT
COLOR:GREEN

025 MX
DUAL-ROW SERIES
UNSEALED

SPECIFICATIONS

Material	Connector	PBT
	Male Terminal	-
	Female Terminal	COPPER ALLOY
Operating Temperature Range		-40°C~+100°C
Voltage Drop		5mV/A
Isolation Resistance		100MΩ
Dielectric Resistance		1000V
Applicable Wire Size		0.3mm^2 (22 AWG)
Maximum Electric Current		4A

025 MX
DUAL-ROW SERIES
UNSEALED

TERMINAL

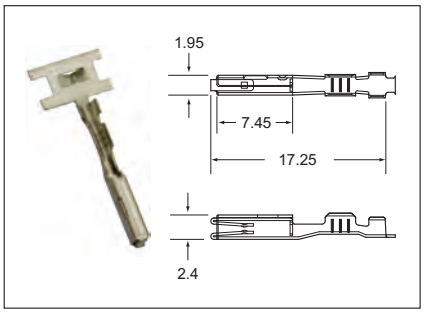

ITEM NO.	WIRE RANGE		MATERIAL	PLATINGS	Q'TY	APPLICATOR	DIES
	A.W.G.	mm^2			REEL		
1211A0570	22	0.3	Copper Alloy	Pre-Tin	9000	CDM-97004-S	CDT-97004-S

HOUSING

POLE		FEMALE
8		**3208A0579**  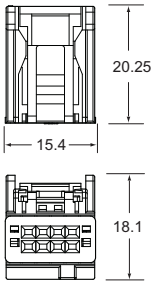 **100 PCS**

- HOUSING (UNIT:mm)
  MATERIAL:PBT
  COLOR:GREY

025 JSTC
WPZ SERIES
SEALED

SPECIFICATIONS

Material	Connector	PBT
	Male Terminal	-
	Female Terminal	-
Operating Temperature Range		-40˚C~+125˚C
Voltage Drop		-
Isolation Resistance		100MΩ
Dielectric Resistance		1000V
Applicable Wire Size		-
Maximum Electric Current		-

025 JSTC
WPZ SERIES
SEALED

TERMINAL

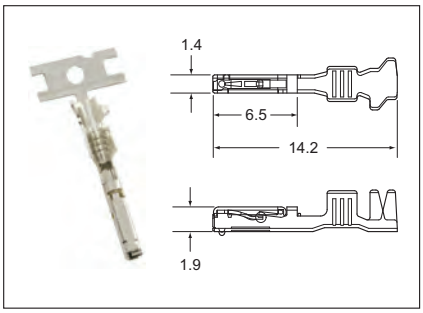

ITEM NO.	WIRE RANGE		MATERIAL	PLATINGS	Q'TY	APPLICATOR	DIES
	A.W.G.	mm²			REEL		
1211A0710	22-20	0.3-0.5	Copper Alloy	Pre-Tin	8000	CDM-97006-S	CDT-97006-S
1211A0711	18-16	0.75-1.25	Copper Alloy	Pre-Tin	6000	CDM-97006-M	CDT-97006-M

LATCH

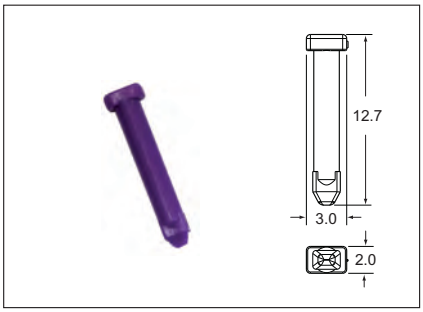

ITEM NO.	MATERIAL	COLOR	Q'TY BAG	REMARKS
7001A0716	PBT	VIOLET	1000	

HOUSING

POLE	MALE	FEMALE	LOCK
36	**3136A0712** 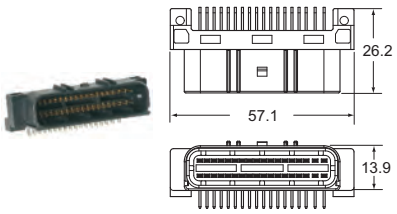 **108 PCS**	**3236A0712** 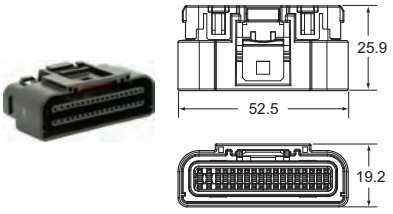 **25 PCS**	**3736A0716**  **100 PCS**

- HOUSING (UNIT:mm)
  MATERIAL:PBT
  COLOR:HOUSING:3136A0712, 3236A0712:BLACK
  LOCK:PURPLE

025 JSTC
WPZ SERIES
SEALED

HOUSING

POLE	MALE	FEMALE	LOCK
36		**3236A0899** 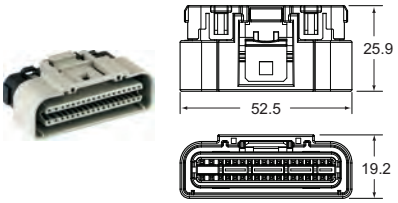 **25 PCS**	**3736A0716** 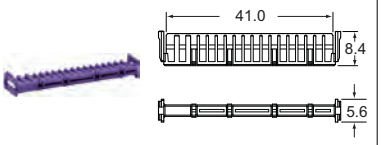 **100 PCS**

• HOUSING (UNIT:mm)
MATERIAL:PBT
COLOR:HOUSING:3236A0899:GREY
LOCK:PURPLE

025 JSTC
XH SERIES
UNSEALED

SPECIFICATIONS

Material	Connector	PA66
	Male Terminal	-
	Female Terminal	BRASS
Operating Temperature Range		-40°C~+125°C
Voltage Drop		-
Isolation Resistance		100MΩ
Dielectric Resistance		1000V
Applicable Wire Size		-
Maximum Electric Current		-

025 JSTC
XH SERIES
UNSEALED

TERMINAL

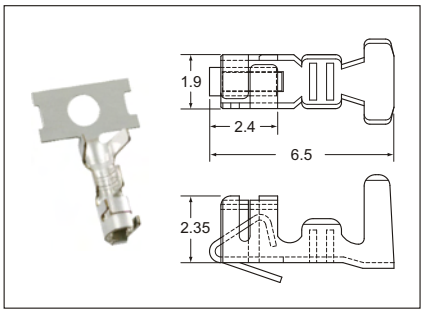

ITEM NO.	WIRE RANGE		MATERIAL	PLATINGS	Q'TY	APPLICATOR	DIES
	A.W.G.	mm^2			REEL		
1201A0990	28-22	0.08-0.3	Brass	Pre-Tin	7000	CDM-99005-S	CDT-99005-S

HOUSING

POLE		FEMALE
4		**3204A0994** 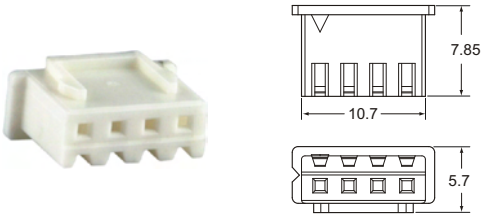 **50 PCS**

- HOUSING (UNIT:mm)
  MATERIAL:PA66
  COLOR:WHITE

025 AM
MQS SERIES
UNSEALED

SPECIFICATIONS

Material	Connector	PBT
	Male Terminal	-
	Female Terminal	-
Operating Temperature Range		-40°C~+120°C
Voltage Drop		5mV/A
Isolation Resistance		100MΩ
Dielectric Resistance		1000V
Applicable Wire Size		0.3mm^2 ~0.85mm^2 (22 AWG~18 AWG)
Maximum Electric Current		6A

025 AM
MQS SERIES
UNSEALED

TERMINAL

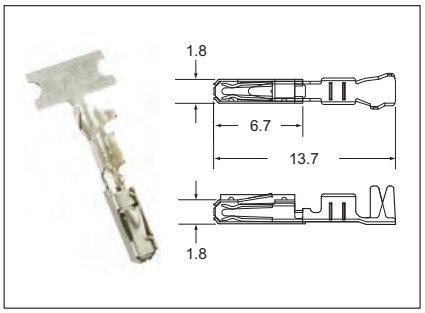

ITEM NO.	WIRE RANGE		MATERIAL	PLATINGS	Q'TY	APPLICATOR	DIES
	A.W.G.	mm^2			REEL		
1211A0330	22-20	0.3-0.5	Copper Alloy	Pre-Tin	11000	CDM-98049-S	CDT-98049-S
1211A0331	20-18	0.5-0.85	Copper Alloy	Pre-Tin	11000	CDM-98049-M	CDT-98049-M

HOUSING

POLE	FEMALE	LOCK
8	**3208A0337**  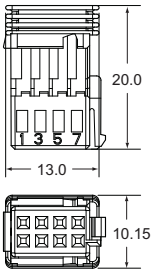 **100 PCS**	**3708A0339**  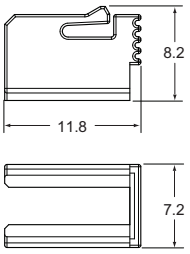 **200 PCS**

- HOUSING (UNIT:mm)
  MATERIAL:PBT
  COLOR:HOUSING:GREEN
  LOCK:GREY

025 RS
UNSEALED

SPECIFICATIONS

Material	Connector	-
	Male Terminal	BRASS
	Female Terminal	-
Operating Temperature Range		-40°C~+100°C
Voltage Drop		5mV/A
Isolation Resistance		-
Dielectric Resistance		-
Applicable Wire Size		0.3mm^2 ~0.5mm^2 (22 AWG~20 AWG)
Maximum Electric Current		10A

025 RS
UNSEALED

TERMINAL

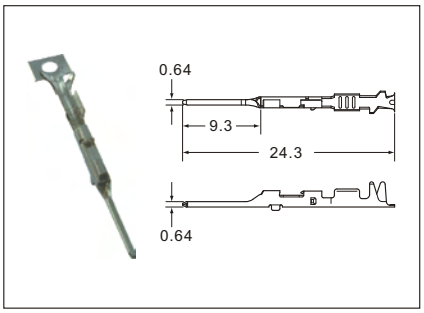

ITEM NO.	WIRE RANGE		MATERIAL	PLATINGS	Q'TY	APPLICATOR	DIES
	A.W.G.	mm^2			REEL		
1101A0045	22-20	0.3-0.5	Brass	Pre-Tin	7000	CDM-96018-S	CDT-96018-S

030 SERIES

AUTOMOTIVE CONNECTORS



030 RS
SEALED

SPECIFICATIONS

Material	Connector	PBT
	Male Terminal	-
	Female Terminal	COPPER ALLOY
Operating Temperature Range		-40°C~+120°C
Voltage Drop		5mV/A
Isolation Resistance		100MΩ
Dielectric Resistance		1000V
Applicable Wire Size		0.3mm^2 ~0.5mm^2 (22 AWG~20 AWG)
Maximum Electric Current		6A

030 RS
SEALED

TERMINAL

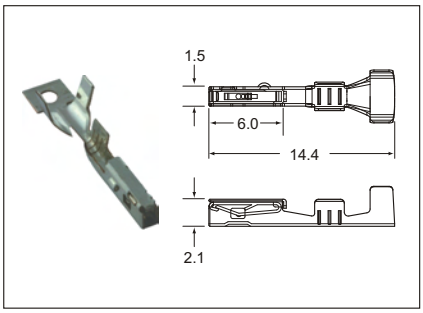

ITEM NO.	WIRE RANGE		MATERIAL	PLATINGS	Q'TY	APPLICATOR	DIES
	A.W.G.	mm^2			REEL		
1211A0195	22-20	0.3-0.5	Copper Alloy	Pre-Tin	6000	CDM-96030-S	CDT-96030-S

RUBBER SEAL

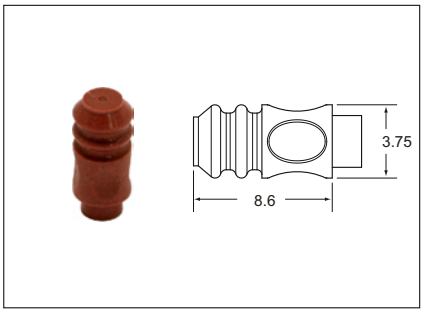

ITEM NO.	MATERIAL	COLOR	Q'TY BAG	REMARKS
7000A0140	SILICONE	BROWN	1000	

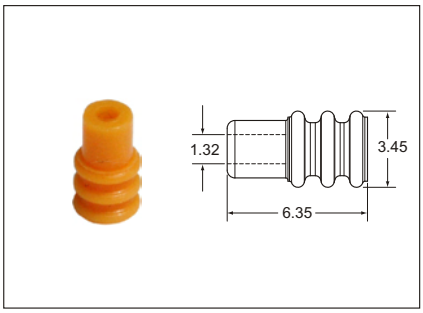

ITEM NO.	MATERIAL	COLOR	Q'TY BAG	REMARKS
7001A0158	SILICONE	ORANGE	1000	

030 RS
SEALED

HOUSING

POLE		FEMALE
3		**3203A0492**  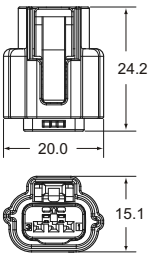 **100 PCS**
4		**3204A0492**  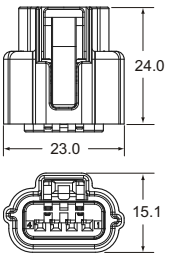 **100 PCS**
5		**3205A0492**  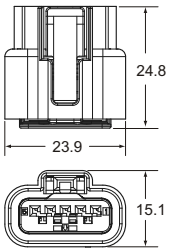 **100 PCS**

• HOUSING (UNIT:mm)
MATERIAL:PBT
COLOR:BLACK

030 YK
91A SERIES
UNSEALED

SPECIFICATIONS

Material	Connector	-
	Male Terminal	-
	Female Terminal	COPPER ALLOY
Operating Temperature Range		-40°C~+125°C
Voltage Drop		5mV/A
Isolation Resistance		-
Dielectric Resistance		-
Applicable Wire Size		0.3mm^2 ~0.5mm^2 (22 AWG~20 AWG)
Maximum Electric Current		10A

030 YK
91A SERIES
UNSEALED

TERMINAL

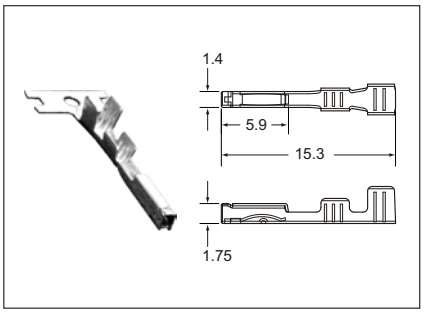

ITEM NO.	WIRE RANGE		MATERIAL	PLATINGS	Q'TY	APPLICATOR	DIES
	A.W.G.	mm^2			REEL		
1211A0105	22-20	0.3-0.5	Copper Alloy	Pre-Tin	7000	CDM-94128-S	CDT-94128-S

040 SERIES

AUTOMOTIVE CONNECTORS



040 YK
1.0 III SERIES
SEALED

SPECIFICATIONS

Material	Connector	PBT
	Male Terminal	-
	Female Terminal	COPPER ALLOY
Operating Temperature Range		-40°C~+120°C
Voltage Drop		10mV/A
Isolation Resistance		100MΩ
Dielectric Resistance		1000V
Applicable Wire Size		$0.3mm^2$ ~$0.5mm^2$ (22 AWG~20 AWG)
Maximum Electric Current		5A

040 YK
1.0 III SERIES
SEALED

TERMINAL

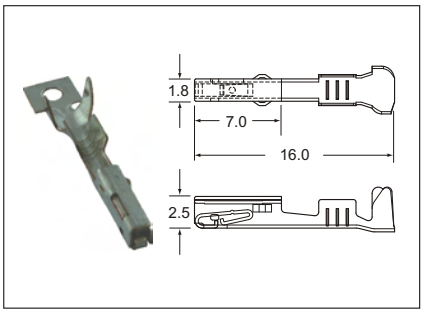

ITEM NO.	WIRE RANGE		MATERIAL	PLATINGS	Q'TY	APPLICATOR	DIES
	A.W.G.	mm^2			REEL		
1211A0185	22-20	0.3-0.5	Copper Alloy	Pre-Tin	4000	CDM-96005-S	CDT-96005-S

HOUSING

POLE		FEMALE
5		**3205A0502**  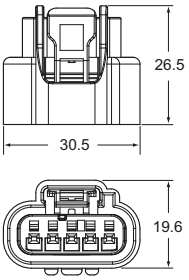 **100 PCS**

• HOUSING (UNIT:mm)
MATERIAL:PBT
COLOR:BLACK

040 JAEC
MX23A SERIES
SEALED

SPECIFICATIONS

Material	Connector	PBT
	Male Terminal	-
	Female Terminal	-
Operating Temperature Range		-40°C~+125°C
Voltage Drop		-
Isolation Resistance		100MΩ
Dielectric Resistance		1000V
Applicable Wire Size		-
Maximum Electric Current		-

040 JAEC
MX23A SERIES
SEALED

LATCH

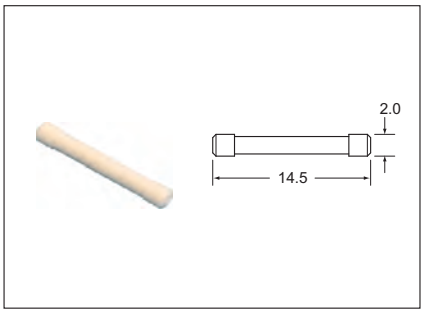

ITEM NO.	MATERIAL	COLOR	Q'TY	REMARKS
7001A0314	PBT	WHITE	1000	

HOUSING

POLE	MALE	FEMALE	LOCK
18	3118A0312 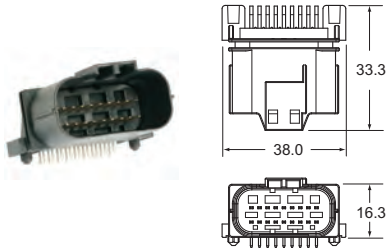 120 PCS	3218A0312 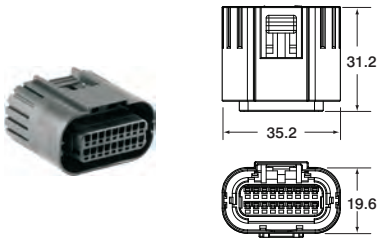 20 PCS	3718A0318 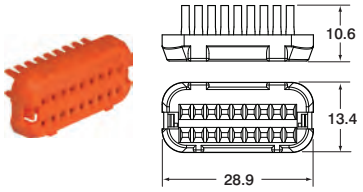 100 PCS
26	3126A0312 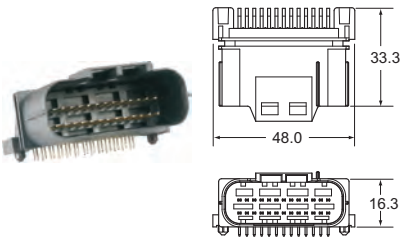 120 PCS	3226A0312 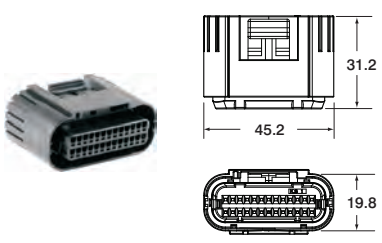 10 PCS	3726A0318 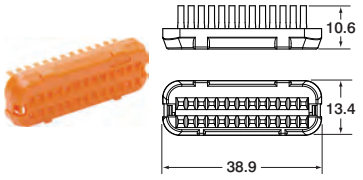 100 PCS
34	3134A0312 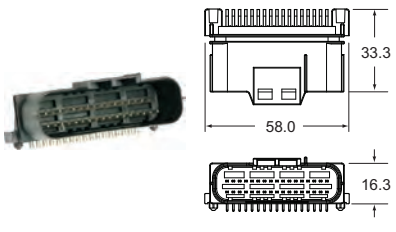 90 PCS	3234A0312 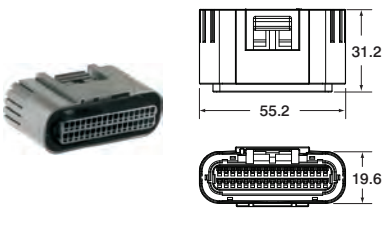 10 PCS	3734A0318 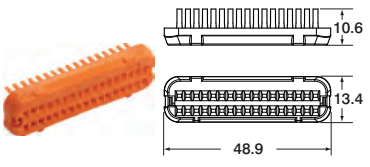 50 PCS

- HOUSING (UNIT:mm)
  MATERIAL:PBT
  COLOR:HOUSING:BLACK
  LOCK:ORANGE

040 KST
ECU SERIES
SEALED

SPECIFICATIONS

Material	Connector	PBT
	Male Terminal	-
	Female Terminal	COPPER ALLOY
Operating Temperature Range		-40°C~+125°C
Voltage Drop		5mV/A
Isolation Resistance		100MΩ
Dielectric Resistance		1000V
Applicable Wire Size		0.3mm^2 ~1.25mm^2 (22 AWG~16 AWG)
Maximum Electric Current		5A

040 KST ECU SERIES

SEALED

TERMINAL

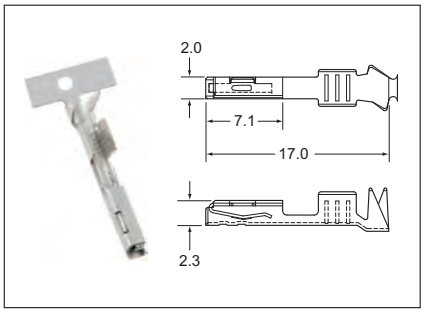

ITEM NO.	WIRE RANGE		MATERIAL	PLATINGS	Q'TY	APPLICATOR	DIES
	A.W.G.	mm^2			REEL		
1211A1010	22-20	0.3-0.5	Copper Alloy	Pre-Tin	6000	CDM-9808-S	CDT-9808-S
1211A1011	18	0.85	Copper Alloy	Pre-Tin	5000	CDM-9808-M	CDT-9808-M

LATCH

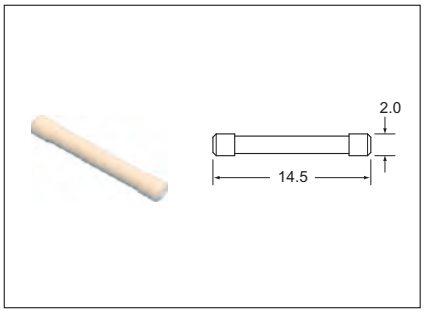

ITEM NO.	MATERIAL	COLOR	Q'TY	REMARKS
7001A0314	PBT	WHITE	1000	

HOUSING

POLE	MALE	FEMALE	LOCK
18	**3118A0312**  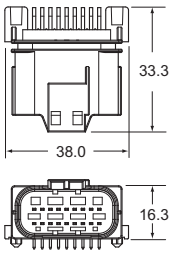 **50 PCS**	**3218A1012**  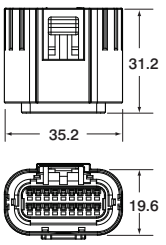 **50 PCS**	**3718A0318**  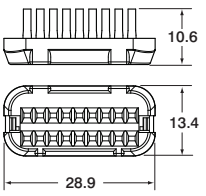 **100 PCS**
26	**3126A0312**  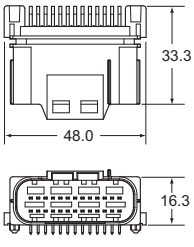 **50 PCS**	**3226A1012**  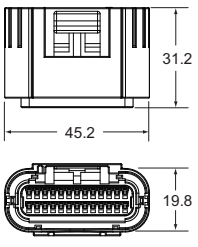 **10 PCS**	**3726A0318**  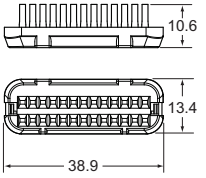 **100 PCS**

- HOUSING (UNIT:mm)
  MATERIAL:PBT
  COLOR:HOUSING:BLACK
  LOCK:ORANGE

040 KST ECU SERIES

SEALED

HOUSING

POLE	MALE	FEMALE	LOCK
34	**3134A0312** 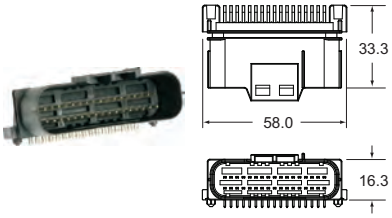 **50 PCS**	**3234A1012** 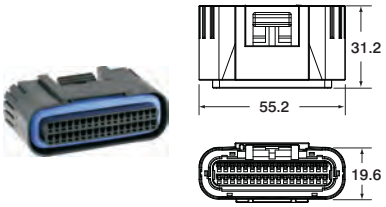 **25 PCS**	**3734A0318** 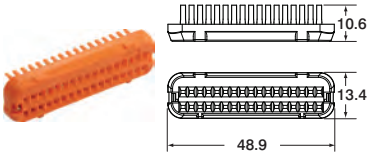 **50 PCS**

- HOUSING (UNIT:mm)
  MATERIAL:PBT
  COLOR:HOUSING:BLACK
  LOCK:ORANGE

040 SMTO
DL SERIES
UNSEALED

SPECIFICATIONS

Material	Connector	PBT
	Male Terminal	BRASS
	Female Terminal	COPPER ALLOY
Operating Temperature Range		-40°C~+120°C
Voltage Drop		3mV/A
Isolation Resistance		100MΩ
Dielectric Resistance		1000V
Applicable Wire Size		$0.3mm^2$ ~$1.25mm^2$ (22 AWG~16 AWG)
Maximum Electric Current		8A

040 SMTO
DL SERIES
UNSEALED

TERMINAL

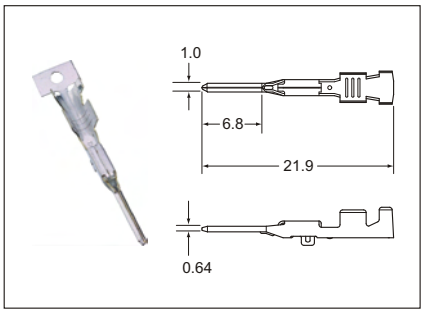

ITEM NO.	WIRE RANGE A.W.G.	WIRE RANGE mm²	MATERIAL	PLATINGS	Q'TY REEL	APPLICATOR	DIES
1101A0040	22-20	0.3-0.5	Brass	Pre-Tin	5000	CDM-96029-S	CDT-96029-S
1101A0041	18-16	0.85-1.25	Brass	Pre-Tin	5000	CDM-94104-M	CDT-94104-M

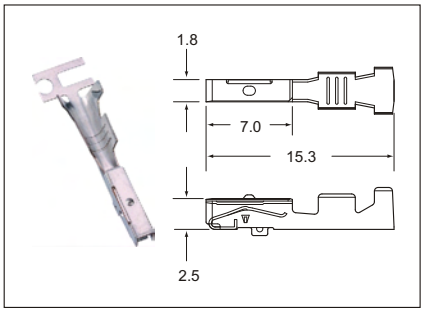

ITEM NO.	WIRE RANGE A.W.G.	WIRE RANGE mm²	MATERIAL	PLATINGS	Q'TY REEL	APPLICATOR	DIES
1211A0055	22-20	0.3-0.5	Copper Alloy	Pre-Tin	5000	CDM-96031-S	CDT-96031-S
1211A0056	18-16	0.85-1.25	Copper Alloy	Pre-Tin	5000	CDM-96031-M	CDT-96031-M

HOUSING

POLE		FEMALE
8		**3208A0044**  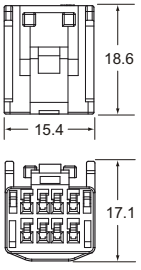 **100 PCS**

- HOUSING (UNIT:mm)
  MATERIAL:PBT
  COLOR:WHITE

040 SMTO
HX SERIES
SEALED

SPECIFICATIONS

Material	Connector	PBT
	Male Terminal	-
	Female Terminal	BRASS
Operating Temperature Range		-40°C~+120°C
Voltage Drop		5mV/A
Isolation Resistance		100MΩ
Dielectric Resistance		1000V
Applicable Wire Size		0.3mm^2 ~0.5mm^2 (22 AWG~20 AWG)
Maximum Electric Current		8A

040 SMTO
HX SERIES
SEALED

TERMINAL

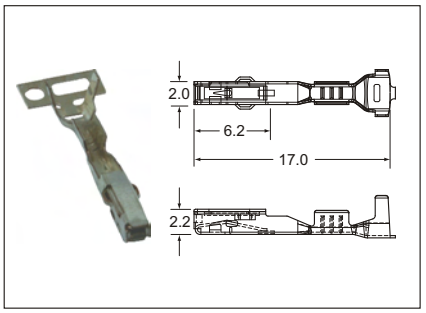

ITEM NO.	WIRE RANGE		MATERIAL	PLATINGS	Q'TY REEL	APPLICATOR	DIES
	A.W.G.	mm^2					
1211A0170	22-20	0.3-0.5	Copper Alloy	Pre-Tin	5000	CDM-96003-S	CDT-96003-S

RUBBER SEAL

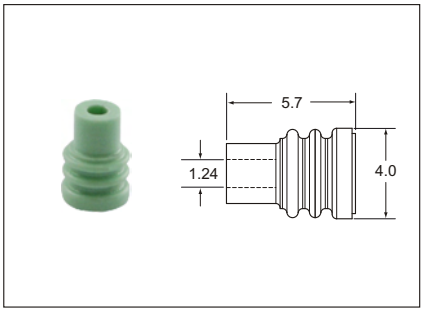

ITEM NO.	MATERIAL	COLOR	Q'TY BAG	REMARKS
7001A0477	SILICONE	GREEN	1000	

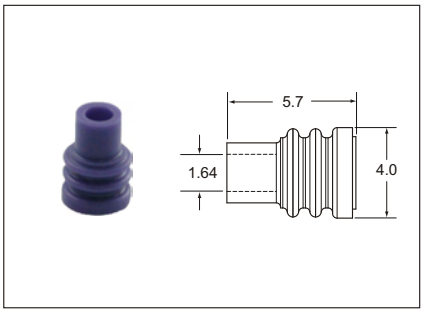

ITEM NO.	MATERIAL	COLOR	Q'TY BAG	REMARKS
7001A048V	SILICONE	PURPLE	1000	

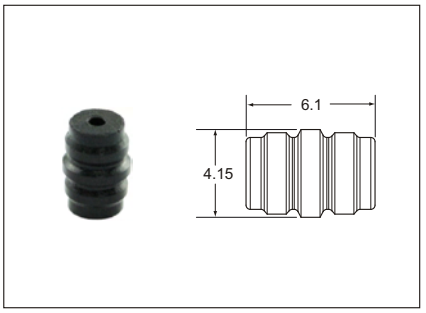

ITEM NO.	MATERIAL	COLOR	Q'TY BAG	REMARKS
7000A0482	NBR	BLACK	1000	

040 SMTO
HX SERIES
SEALED

HOUSING

POLE	FEMALE	LOCK
2	**3202A0482**  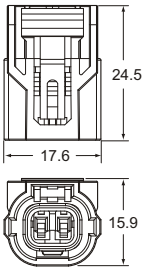 **100 PCS**	**3702A0489**  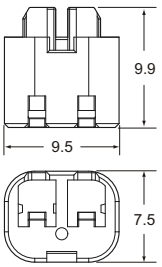 **500 PCS**

- HOUSING (UNIT:mm)
  MATERIAL:HOUSING:PBT
  LOCK:PBT
  COLOR:HOUSING:BLACK
  LOCK:GREY

040 AM
MULT SERIES
UNSEALED

SPECIFICATIONS

Material	Connector	PBT
	Male Terminal	-
	Female Terminal	COPPER ALLOY
Operating Temperature Range		-30°C~+105°C
Voltage Drop		5mV/A
Isolation Resistance		100MΩ
Dielectric Resistance		1000V
Applicable Wire Size		$0.3mm^2$ ~$0.5mm^2$ (22 AWG~20 AWG)
Maximum Electric Current		5A

040 AM
MULT SERIES
UNSEALED

TERMINAL

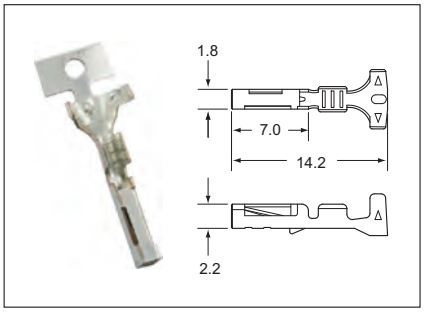

ITEM NO.	WIRE RANGE		MATERIAL	PLATINGS	Q'TY	APPLICATOR	DIES
	A.W.G.	mm^2			REEL		
1211A0165	22-20	0.3-0.5	Copper Alloy	Pre-Tin	5000	CDM-97025-S	CDT-97025-S

HOUSING

POLE		FEMALE
16		**3216A0102**  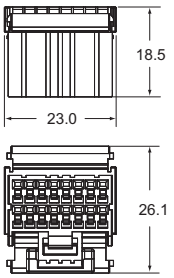 **100 PCS**
20		**3220A0102**  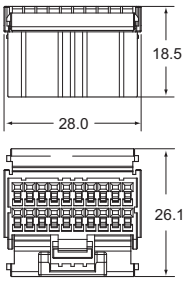 **100 PCS**

- HOUSING (UNIT:mm)
  MATERIAL:PBT
  COLOR:BLACK

040 AM
MULT I/O SERIES
UNSEALED

SPECIFICATIONS

Material	Connector	PBT
	Male Terminal	-
	Female Terminal	COPPER ALLOY
Operating Temperature Range		-30°C~+105°C
Voltage Drop		5mV/A
Isolation Resistance		100MΩ
Dielectric Resistance		1000V
Applicable Wire Size		0.3mm^2 ~0.5mm^2 (22 AWG~20 AWG)
Maximum Electric Current		5A

040 AM
MULT I/O SERIES
UNSEALED

TERMINAL

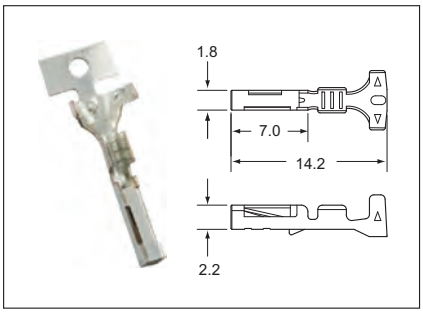

ITEM NO.	WIRE RANGE		MATERIAL	PLATINGS	Q'TY	APPLICATOR	DIES
	A.W.G.	mm^2			REEL		
1211A0165	22-20	0.3-0.5	Copper Alloy	Pre-Tin	5000	CDM-97025-S	CDT-97025-S

HOUSING

POLE		FEMALE
20		**3220A0112**  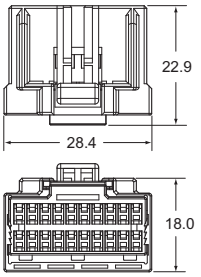 **100 PCS**

- HOUSING (UNIT:mm)
  MATERIAL:PBT
  COLOR:BLACK

040 SERIES
UNSEALED

SPECIFICATIONS

Material	Connector	-
	Male Terminal	Brass
	Female Terminal	COPPER ALLOY
Operating Temperature Range		-40°C~+105°C
Voltage Drop		5mV/A
Isolation Resistance		-
Dielectric Resistance		-
Applicable Wire Size		0.3mm^2 ~0.85mm^2 (22 AWG~18 AWG)
Maximum Electric Current		15A

040 SERIES
UNSEALED

TERMINAL

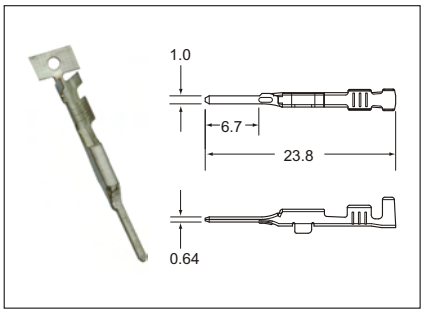

ITEM NO.	WIRE RANGE A.W.G.	WIRE RANGE mm²	MATERIAL	PLATINGS	Q'TY REEL	APPLICATOR	DIES
1101A0640	22-20	0.3-0.5	Brass	Pre-Tin	5000	CDM-97003-S	CDT-97003-S

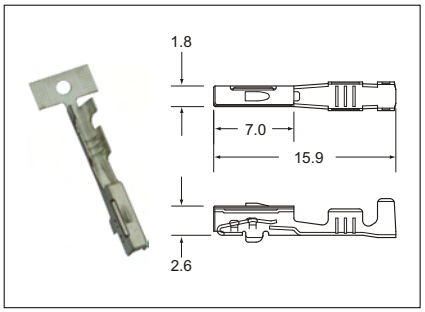

ITEM NO.	WIRE RANGE A.W.G.	WIRE RANGE mm²	MATERIAL	PLATINGS	Q'TY REEL	APPLICATOR	DIES
1211A0640	22-18	0.3-0.85	Copper Alloy	Pre-Tin	5000	CDM-97024-S	CDT-97024-S

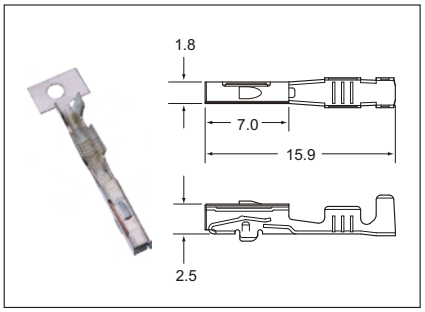

ITEM NO.	WIRE RANGE A.W.G.	WIRE RANGE mm²	MATERIAL	PLATINGS	Q'TY REEL	APPLICATOR	DIES
1211A0040	22-18	0.3-0.85	Copper Alloy	Pre-Tin	5000	CDM-94125-S	CDT-94125-S

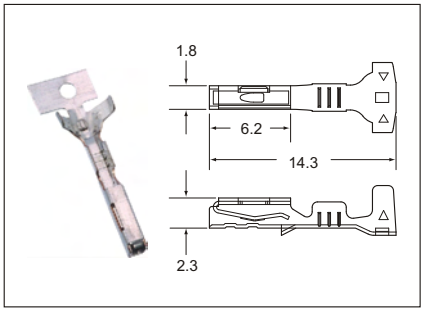

ITEM NO.	WIRE RANGE A.W.G.	WIRE RANGE mm²	MATERIAL	PLATINGS	Q'TY REEL	APPLICATOR	DIES
1211A0045	22-20	0.3-0.5	Copper Alloy	Pre-Tin	5000	CDM-94108-S	CDT-94108-S

040 SERIES
UNSEALED

TERMINAL

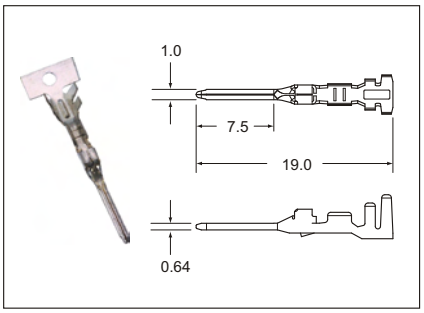

ITEM NO.	WIRE RANGE		MATERIAL	PLATINGS	Q'TY	APPLICATOR	DIES
	A.W.G.	mm^2			REEL		
1101A0100	22-20	0.3-0.5	Brass	Pre-Tin	5000	CDM-95001-S	CDT-95001-S

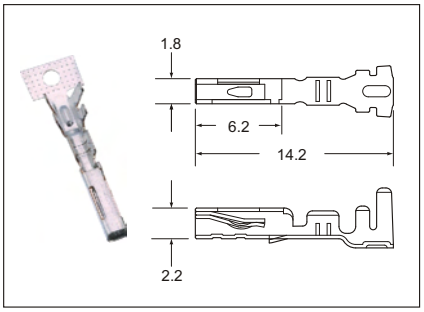

ITEM NO.	WIRE RANGE		MATERIAL	PLATINGS	Q'TY	APPLICATOR	DIES
	A.W.G.	mm^2			REEL		
1211A0100	22-20	0.3-0.5	Copper Alloy	Pre-Tin	5000	CDM-95022-S	CDT-95022-S

040 DF
M-PARK SERIES
UNSEALED

SPECIFICATIONS

Material	Connector	PBT OR NY66
	Male Terminal	-
	Female Terminal	-
Operating Temperature Range		-40°C~+85°C
Voltage Drop		-
Isolation Resistance		100MΩ
Dielectric Resistance		1000V
Applicable Wire Size		-
Maximum Electric Current		-

040 DF
M-PARK SERIES
UNSEALED

TERMINAL

POLE	FEMALE	FEMALE	LOCK	LOCK
32	**3232A0405** 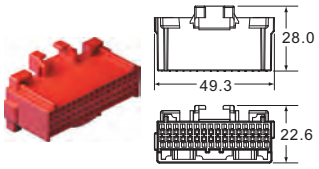 **50 PCS**	**3232A0413** 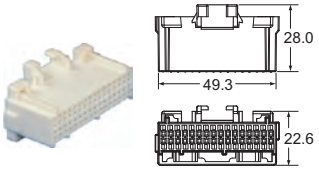 **50 PCS**	**3732A0409** 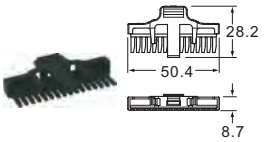 **50 PCS**	**3732A0419** 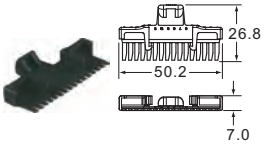 **100 PCS**

• HOUSING (UNIT:mm)
MATERIAL:HOUSING:PBT
LOCK:NYLON66
COLOR:HOUSING:3232A0405:RED
3232A0413:YELLOW
LOCK:GREY

050 SERIES

AUTOMOTIVE CONNECTORS



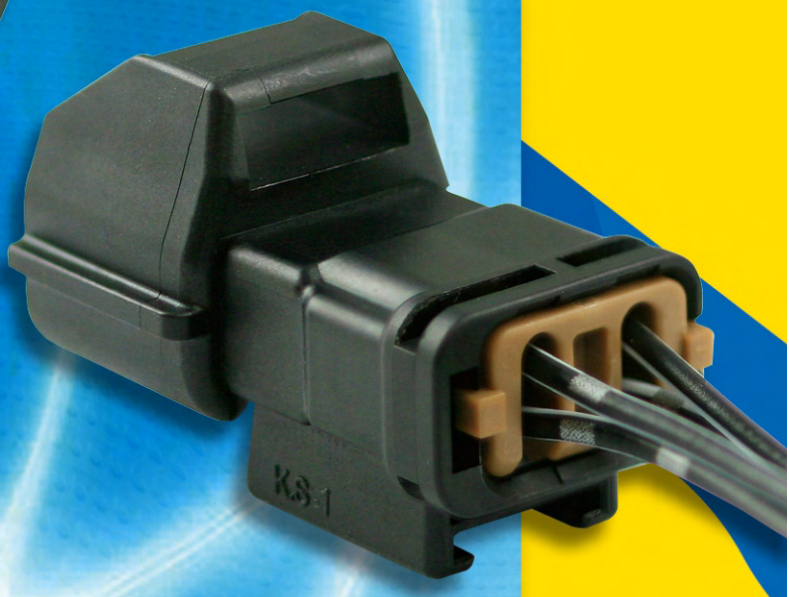

050 YK
SP SERIES
UNSEALED

SPECIFICATIONS

Material	Connector	PBT
	Male Terminal	-
	Female Terminal	BRASS
Operating Temperature Range		-40°C~+120°C
Voltage Drop		5mV/A
Isolation Resistance		100MΩ
Dielectric Resistance		1000V
Applicable Wire Size		0.3mm^2 ~0.5mm^2 (22 AWG~20 AWG)
Maximum Electric Current		4A

050 YK
SP SERIES
UNSEALED

TERMINAL

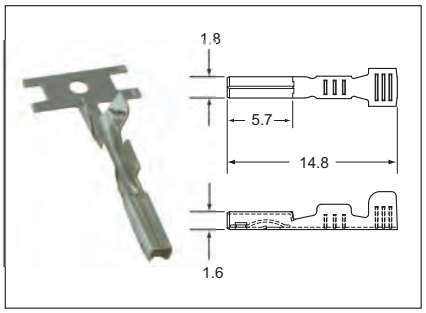

ITEM NO.	WIRE RANGE		MATERIAL	PLATINGS	Q'TY	APPLICATOR	DIES
	A.W.G.	mm^2			REEL		
1201A0050	22-20	0.3-0.5	Brass	Pre-Tin	5000	CDM-93112-S	CDT-93112-S

HOUSING

POLE	MALE	LOCK
10	**3210A0024**  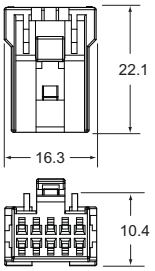 **100 PCS**	**3710A0023**  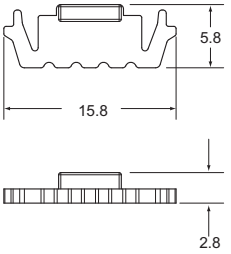 **500 PCS**
12	**3212A0024**  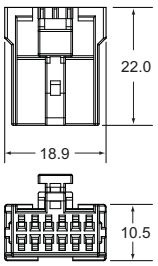 **100 PCS**	**3712A0023**  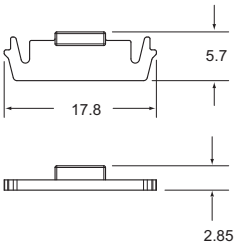 **500 PCS**
16	**3216A0024**  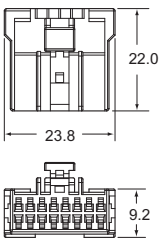 **100 PCS**	**3716A0023**  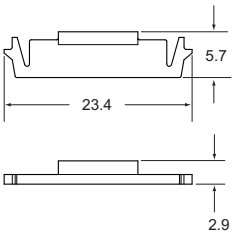 **500 PCS**

- HOUSING (UNIT:mm)
  MATERIAL:PBT
  COLOR:HOUSING:WHITE
  LOCK:YELLOW

050 YK
SSD SERIES
SEALED

SPECIFICATIONS

Material	Connector	PBT
	Male Terminal	COPPER ALLOY
	Female Terminal	COPPER ALLOY
Operating Temperature Range		-40°C~+120°C
Voltage Drop		3mV/A
Isolation Resistance		100MΩ
Dielectric Resistance		1000V
Applicable Wire Size		$0.3mm^2$ ~$0.85mm^2$ (22 AWG~18 AWG)
Maximum Electric Current		9A

050 YK
SSD SERIES
SEALED

TERMINAL

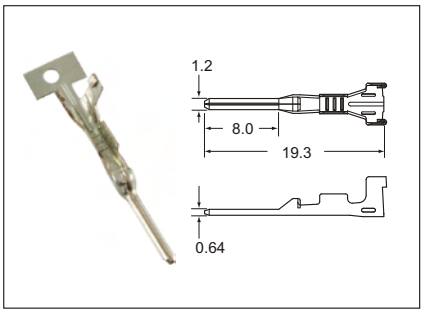

ITEM NO.	WIRE RANGE		MATERIAL	PLATINGS	Q'TY	APPLICATOR	DIES
	A.W.G.	mm²			REEL		
1111A0250	22-18	0.3-0.85	Copper Alloy	Pre-Tin	4000	CDM-101002-S	CDT-101002-S

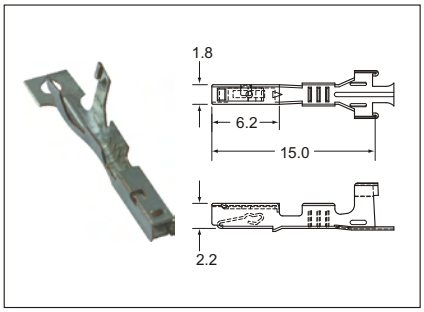

ITEM NO.	WIRE RANGE		MATERIAL	PLATINGS	Q'TY	APPLICATOR	DIES
	A.W.G.	mm²			REEL		
1211A0251	20-18	0.5-0.8	Copper Alloy	Pre-Tin	3000	CDM-95029-S	CDT-95029-S

RUBBER SEAL

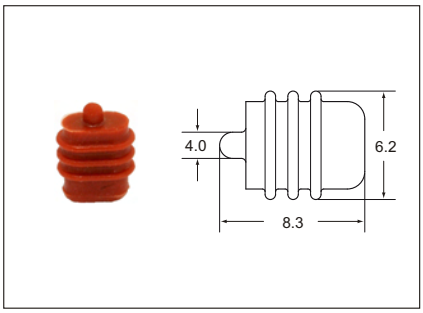

ITEM NO.	MATERIAL	COLOR	Q'TY BAG	REMARKS
7000A0250	SILICONE	ORANGE	1000	

050 YK
SSD SERIES
SEALED

HOUSING

POLE	MALE	FEMALE	LOCK
3	**3103A0252**  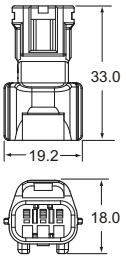 **100 PCS**	**3203A0252**  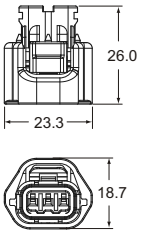 **100 PCS**	**3703A0250**  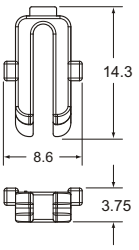 **500 PCS**
3		**3203A0909**  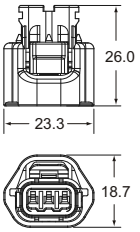 **100 PCS**	**3703A0250**  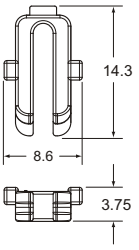 **500 PCS**
4	**3104A0252**  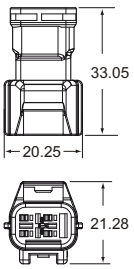 **100 PCS**	**3204A0252**  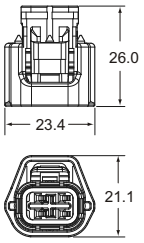 **100 PCS**	**3704A0250**  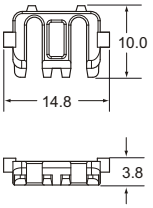 **500 PCS**

- HOUSING (UNIT:mm)
  MATERIAL:PBT
  COLOR:HOUSING:3103A0252, 3203A0252, 3104A0252, 3204A0252:BLACK
  3203A0909:GREY
  LOCK:BROWN

050 RS
DEW SERIES
SEALED

SPECIFICATIONS

Material	Connector	PBT
	Male Terminal	COPPER ALLOY
	Female Terminal	COPPER ALLOY
Operating Temperature Range		-40°C~+120°C
Voltage Drop		3mV/A
Isolation Resistance		100MΩ
Dielectric Resistance		1000V
Applicable Wire Size		0.5mm^2 ~1.25mm^2 (20 AWG~16 AWG)
Maximum Electric Current		9A

050 RS
DEW SERIES
SEALED

TERMINAL

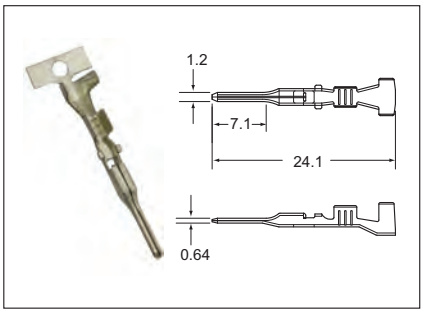

ITEM NO.	WIRE RANGE A.W.G.	WIRE RANGE mm²	MATERIAL	PLATINGS	Q'TY REEL	APPLICATOR	DIES
1111A0621	20-18	0.5-1.25	Copper Alloy	Pre-Tin	3500	CDM-97019-M	CDT-97019-M

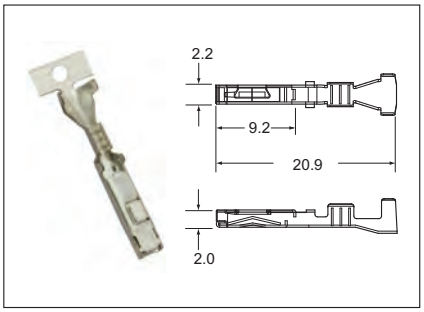

ITEM NO.	WIRE RANGE A.W.G.	WIRE RANGE mm²	MATERIAL	PLATINGS	Q'TY REEL	APPLICATOR	DIES
1211A0621	20-16	0.5-1.25	Copper Alloy	Pre-Tin	4000	CDM-96032-M	CDT-96032-M

HOUSING

POLE	MALE	LOCK	FEMALE	LOCK
10	**3110A0622** 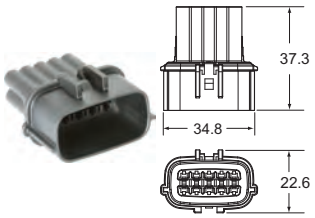 **50 PCS**	**3610A0626** 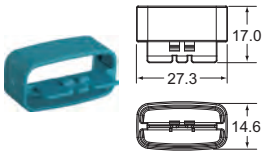 **100 PCS**	**3210A0622** 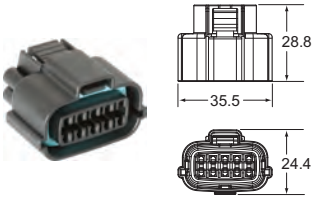 **50 PCS**	**3710A0627** 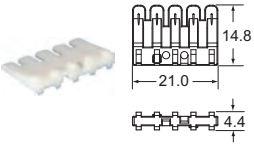 **100 PCS**

- HOUSING (UNIT:mm)
  MATERIAL:PBT
  COLOR:HOUSING:BLACK
  LOCK:3610A0626:BLUE
  3710A0627:GREEN

050 TYPE
UNSEALED

SPECIFICATIONS

Material	Connector	-
	Male Terminal	BRASS
	Female Terminal	-
Operating Temperature Range		-40°C~+120°C
Voltage Drop		3mV/A
Isolation Resistance		-
Dielectric Resistance		-
Applicable Wire Size		0.3mm^2 ~0.5mm^2 (22 AWG~20 AWG)
Maximum Electric Current		9A

050 TYPE
UNSEALED

TERMINAL

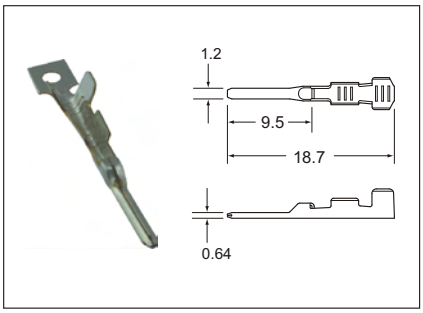

ITEM NO.	WIRE RANGE		MATERIAL	PLATINGS	Q'TY	APPLICATOR	DIES
	A.W.G.	mm^2			REEL		
1101A0070	22-20	0.3-0.5	Brass	Pre-Tin	5000	CDM-95018-S	CDT-95018-S

060 SERIES

AUTOMOTIVE

ECTORS



060 AM
SPECIALSEAL 1.5 SERIES
SEALED

CONSTRUCTION

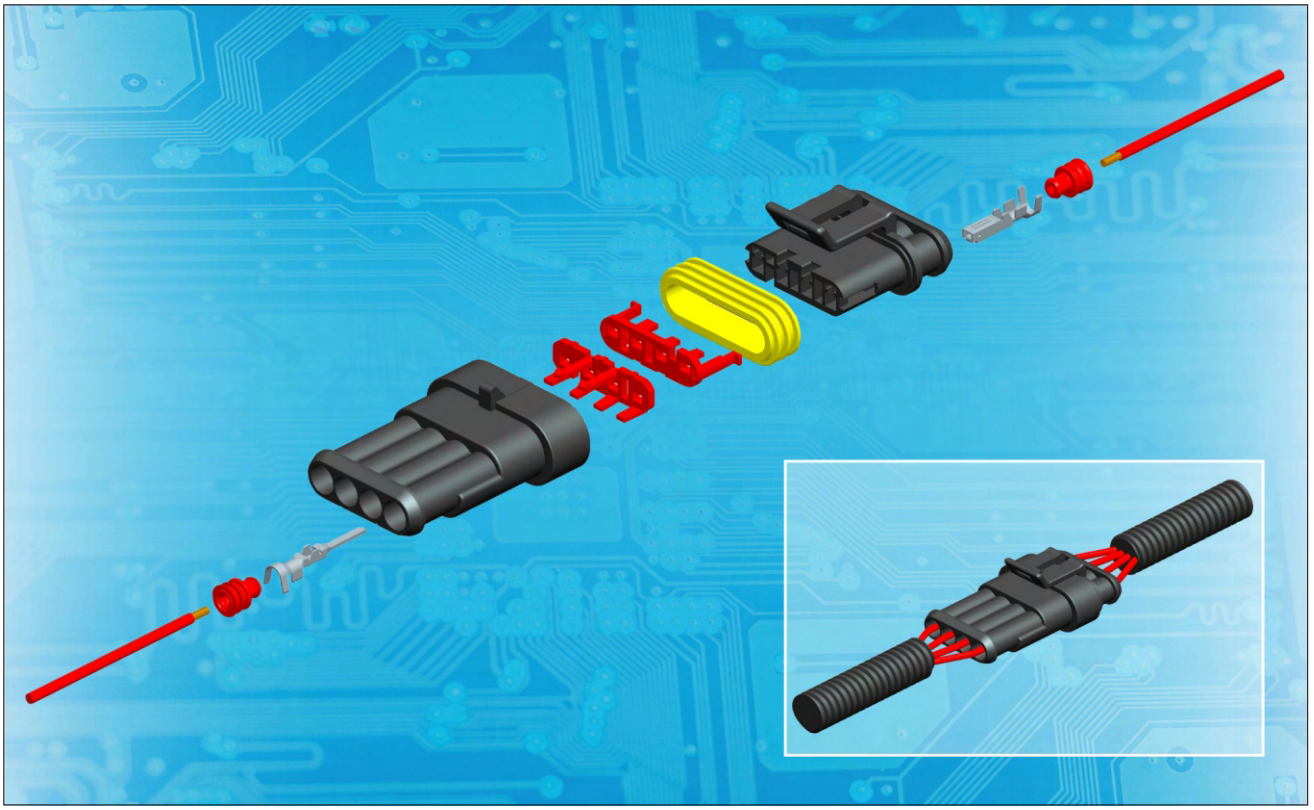

SPECIFICATIONS

Material	Connector	NY66
	Male Terminal	BRASS
	Female Terminal	PHOSPHOR BRONZE
Operating Temperature Range		-40°C~+125°C
Voltage Drop		3mV/A
Isolation Resistance		100MΩ
Dielectric Resistance		1500V
Applicable Wire Size		0.3mm^2 ~1.25mm^2 (22 AWG~16 AWG)
Maximum Electric Current		10A

060 AM
SPECIALSEAL 1.5 SERIES
SEALED

TERMINAL

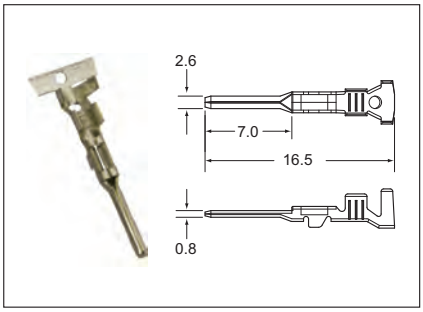

ITEM NO.	WIRE RANGE		MATERIAL	PLATINGS	Q'TY REEL	APPLICATOR	DIES
	A.W.G.	mm^2					
1101A0240	22-20	0.3-0.5	Brass	Pre-Tin	3500	CDM-97018-S	CDT-97018-S
1101A0241	18-16	0.85-1.25	Brass	Pre-Tin	3500	CDM-97018-M	CDT-97018-M

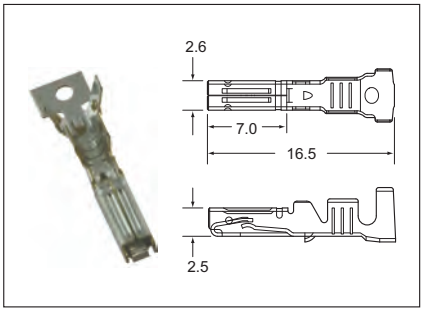

ITEM NO.	WIRE RANGE		MATERIAL	PLATINGS	Q'TY REEL	APPLICATOR	DIES
	A.W.G.	mm^2					
1221A0240	22-20	0.3-0.5	Phosphor Bronze	Pre-Tin	3500	CDM-96006-S	CDT-96006-S
1221A0241	18-16	0.85-1.25	Phosphor Bronze	Pre-Tin	3500	CDM-96006-M	CDT-96006-M

RUBBER SEAL

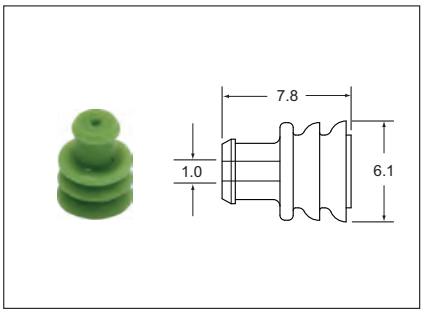

ITEM NO.	MATERIAL	COLOR	Q'TY BAG	REMARKS
7001A0037	SILICONE	GREEN	1000	SUPERSEAL 1.5 SERIES

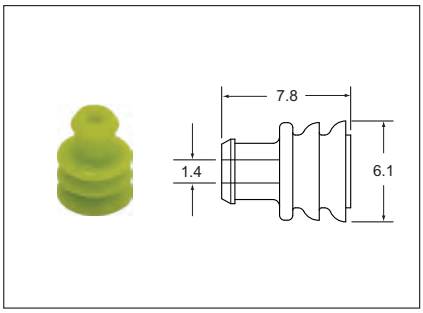

ITEM NO.	MATERIAL	COLOR	Q'TY BAG	REMARKS
7001A0043	SILICONE	YELLOW	1000	SUPERSEAL 1.5 SERIES

060 AM
SPECIALSEAL 1.5 SERIES
SEALED

RUBBER SEAL

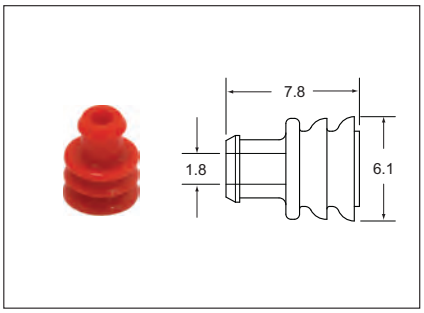

ITEM NO.	MATERIAL	COLOR	Q'TY BAG	REMARKS
7001A0055	SILICONE	RED	1000	SUPERSEAL 1.5 SERIES

HOUSING

POLE	MALE	FEMALE
1	**3101A0242**  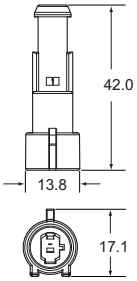 **100 PCS**	**3201A0242**  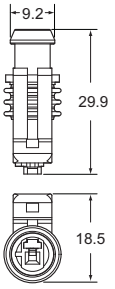 **100 PCS**
2	**3102A0242**  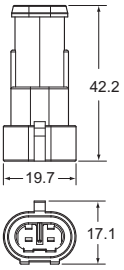 **200 PCS**	**3202A0242**  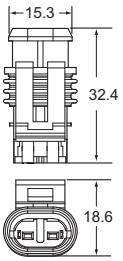 **100 PCS**
3	**3103A0242**  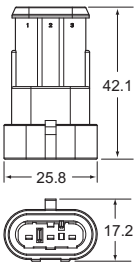 **100 PCS**	**3203A0242**  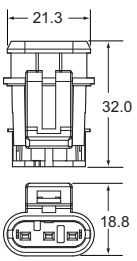 **100 PCS**

• HOUSING (UNIT:mm)
MATERIAL:NY66
COLOR:BLACK

060 AM
SPECIALSEAL 1.5 SERIES
SEALED

HOUSING

POLE	MALE	FEMALE
4	**3104A0242**  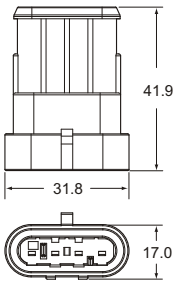 **100 PCS**	**3204A0242**  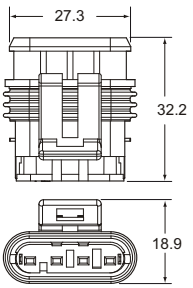 **100 PCS**
5	**3105A0242**  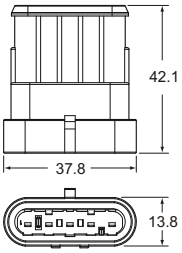 **100 PCS**	**3205A0242**  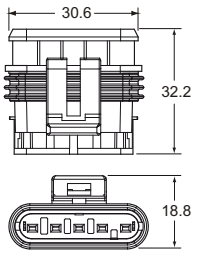 **100 PCS**
6	**3106A0242**  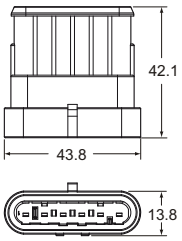 **100 PCS**	**3206A0242**  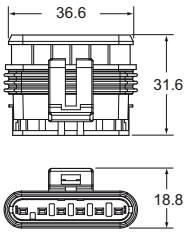 **100 PCS**

• HOUSING (UNIT:mm)
MATERIAL:NY66
COLOR:BLACK

060 AM
POWER DOUBLE LOCK SERIES
UNSEALED

CONSTRUCTION

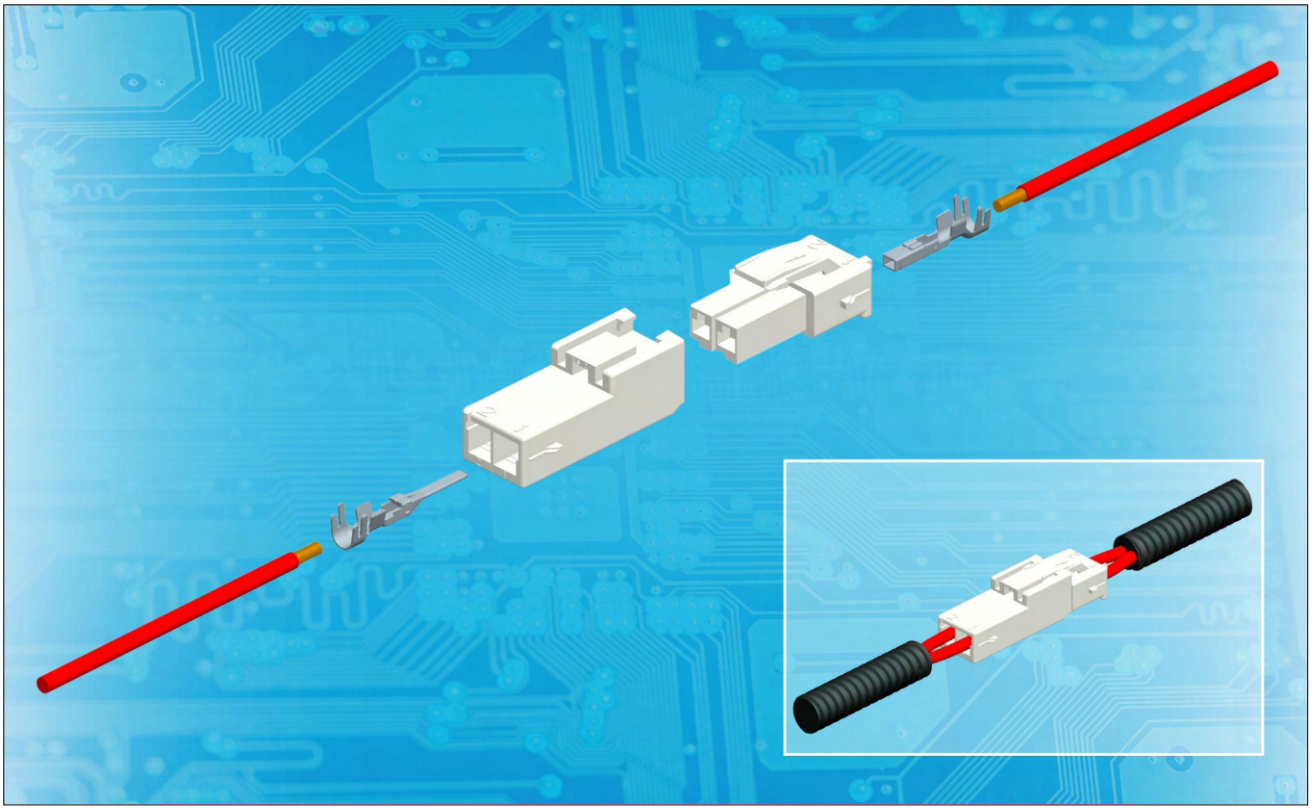

SPECIFICATIONS

Material	Connector	NY66
	Male Terminal	COPPER ALLOY
	Female Terminal	COPPER ALLOY
Operating Temperature Range		-40°C~+105°C
Voltage Drop		10mV/A
Isolation Resistance		100MΩ
Dielectric Resistance		1000V
Applicable Wire Size		0.5mm^2 ~1.25mm^2 (20 AWG~16 AWG)
Maximum Electric Current		13A

060 AM
POWER DOUBLE LOCK SERIES
UNSEALED

TERMINAL

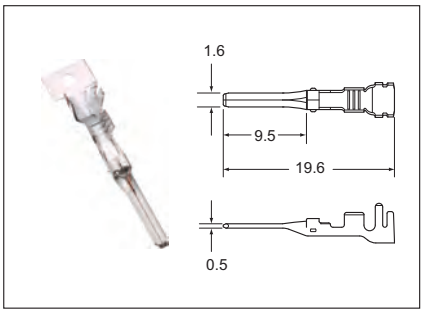

ITEM NO.	WIRE RANGE		MATERIAL	PLATINGS	Q'TY	APPLICATOR	DIES
	A.W.G.	mm^2			REEL		
1111Z0051	20-16	0.5-1.25	Copper Alloy	Pre-Tin	4000	CDM-95006-M	CDT-95006-M

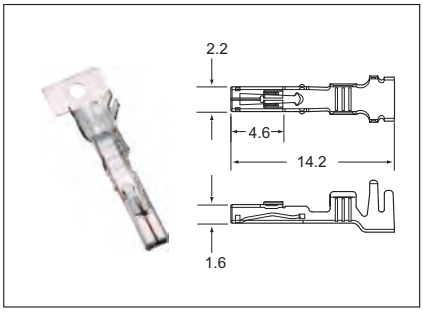

ITEM NO.	WIRE RANGE		MATERIAL	PLATINGS	Q'TY	APPLICATOR	DIES
	A.W.G.	mm^2			REEL		
1211Z0051	20-16	0.5-1.25	Copper Alloy	Pre-Tin	4000	CDM-94127-M	CDT-94127-M

ALL LISTED

HOUSING

POLE	MALE	FEMALE
2	**3102Z0051**  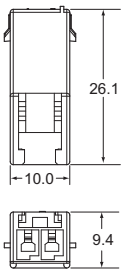 **100 PCS**	**3202Z0051**  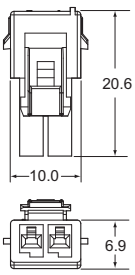 **500 PCS**

- HOUSING (UNIT:mm)
  MATERIAL:NY66
  COLOR:NATURAL

ALL LISTED

060 YK
2.8 SERIES
UNSEALED

SPECIFICATIONS

Material	Connector	PBT
	Male Terminal	-
	Female Terminal	COPPER ALLOY
Operating Temperature Range		-40°C~+125°C
Voltage Drop		10mV/A
Isolation Resistance		100MΩ
Dielectric Resistance		1000V
Applicable Wire Size		0.3mm^2 ~0.5mm^2 (22 AWG~20 AWG)
Maximum Electric Current		6A

060 YK
2.8 SERIES
UNSEALED

TERMINAL

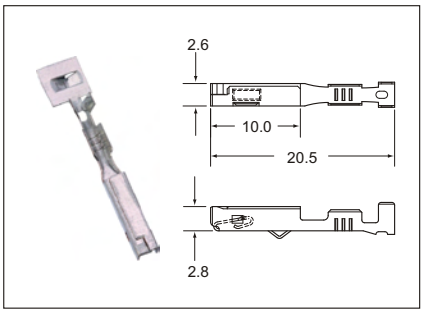

ITEM NO.	WIRE RANGE		MATERIAL	PLATINGS	Q'TY	APPLICATOR	DIES
	A.W.G.	mm^2			REEL		
1211A0035	22-20	0.3-0.5	Copper Alloy	Pre-Tin	5000	CDM-94124-S	CDT-94124-S

060 YK
1.5 SYSTEM SERIES
UNSEALED

HOUSING

POLE		FEMALE
8		**3208A0029**  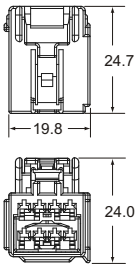 **100 PCS**

• HOUSING (UNIT:mm)
MATERIAL:PBT
COLOR:GREY

060 YK
1.5 SERIES
SEALED

SPECIFICATIONS

Material	Connector	-
	Male Terminal	COPPER ALLOY
	Female Terminal	-
Operating Temperature Range		-40°C~+125°C
Voltage Drop		10mV/A
Isolation Resistance		-
Dielectric Resistance		-
Applicable Wire Size		0.3mm^2 ~1.25mm^2 (22 AWG~16 AWG)
Maximum Electric Current		18A

060 YK
1.5 SERIES
SEALED

TERMINAL

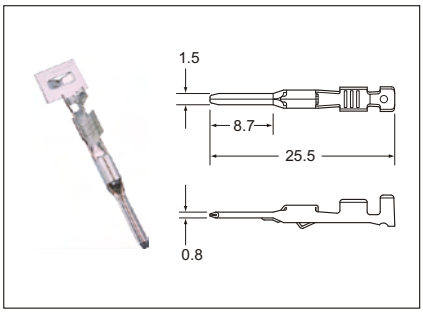

ITEM NO.	WIRE RANGE		MATERIAL	PLATINGS	Q'TY	APPLICATOR	DIES
	A.W.G.	mm^2			REEL		
1111A0036	18-16	0.85-1.25	Copper Alloy	Pre-Tin	5000	CDM-95007-M	CDT-95007-M

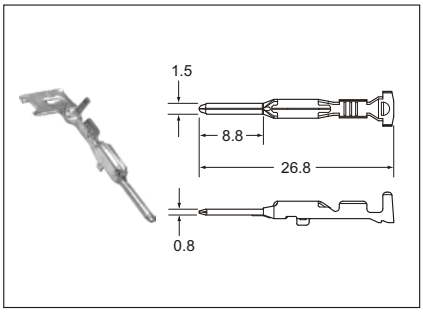

ITEM NO.	WIRE RANGE		MATERIAL	PLATINGS	Q'TY	APPLICATOR	DIES
	A.W.G.	mm^2			REEL		
1111A0105	22-20	0.3-0.5	Copper Alloy	Pre-Tin	4000	CDM-95008-S	CDT-95008-S

060 SMTO
SWP SERIES
UNSEALED

SPECIFICATIONS

Material	Connector	-
	Male Terminal	COPPER ALLOY
	Female Terminal	COPPER ALLOY
Operating Temperature Range		-40°C~+120°C
Voltage Drop		3mV/A
Isolation Resistance		-
Dielectric Resistance		-
Applicable Wire Size		0.3mm^2 ~2.0mm^2 (22 AWG~14 AWG)
Maximum Electric Current		25A

060 SMTO
SWP SERIES
UNSEALED

TERMINAL

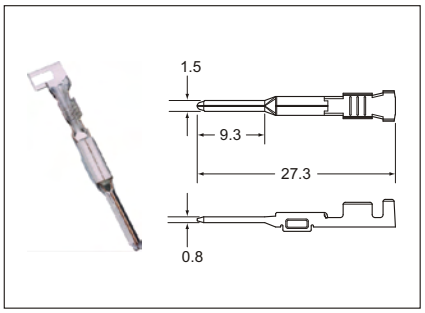

ITEM NO.	WIRE RANGE		MATERIAL	PLATINGS	Q'TY	APPLICATOR	DIES
	A.W.G.	mm²			REEL		
1111A0020	22-20	0.3-0.5	Copper Alloy	Pre-Tin	5000	CDM-94123-S	CDT-94123-S
1111A0021	18-16	0.85-1.25	Copper Alloy	Pre-Tin	5000	CDM-94123-M	CDT-94123-M
1111A0022	14	2.0	Copper Alloy	Pre-Tin	5000	CDM-94123-L	CDT-94123-L

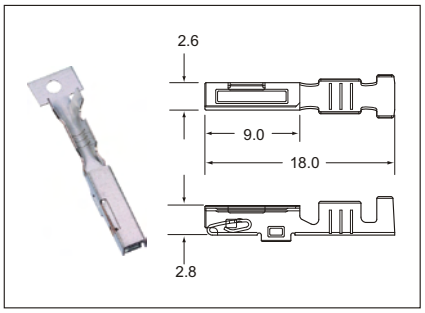

ITEM NO.	WIRE RANGE		MATERIAL	PLATINGS	Q'TY	APPLICATOR	DIES
	A.W.G.	mm²			REEL		
1211A0020	22-20	0.3-0.5	Copper Alloy	Pre-Tin	5000	CDM-95005-S	CDT-95005-S
1211A0021	18-16	0.85-1.25	Copper Alloy	Pre-Tin	4000	CDM-95005-M	CDT-95005-M
1211A0022	14	2.0	Copper Alloy	Pre-Tin	4000	CDM-95005-L	CDT-95005-L

060 SMTO
SL SERIES
SEALED

SPECIFICATIONS

Material	Connector	-
	Male Terminal	-
	Female Terminal	COPPER ALLOY
Operating Temperature Range		-40°C~+120°C
Voltage Drop		3mV/A
Isolation Resistance		-
Dielectric Resistance		-
Applicable Wire Size		0.3mm^2 ~2.0mm^2 (22 AWG~14 AWG)
Maximum Electric Current		25A

060 SMTO
SL SERIES
SEALED

TERMINAL

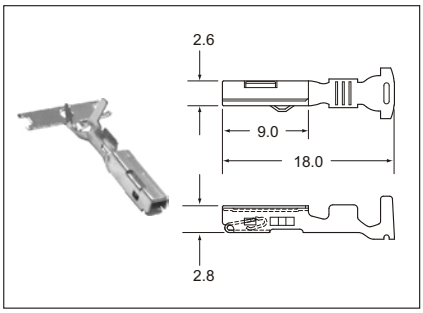

ITEM NO.	WIRE RANGE		MATERIAL	PLATINGS	Q'TY	APPLICATOR	DIES
	A.W.G.	mm^2			REEL		
1211A0025	22-20	0.3-0.5	Copper Alloy	Pre-Tin	4000	CDM-94105-S	CDT-94105-S
1211A0026	18	0.85	Copper Alloy	Pre-Tin	4000	CDM-94105-M	CDT-94105-M
1211A0027	16-14	1.25-2.0	Copper Alloy	Pre-Tin	4000	CDM-94105-L	CDT-94105-L

060 AM
M-TIMER2 SERIES
SEALED

SPECIFICATIONS

Material	Connector	-
	Male Terminal	-
	Female Terminal	COPPER ALLOY STAINLESS STEEL
Operating Temperature Range		-40°C~+120°C
Voltage Drop		5mV/A
Isolation Resistance		-
Dielectric Resistance		-
Applicable Wire Size		0.5mm^2 ~0.85mm^2 (22 AWG~18 AWG)
Maximum Electric Current		15A

060 AM
M-TIMER2 SERIES
SEALED

TERMINAL

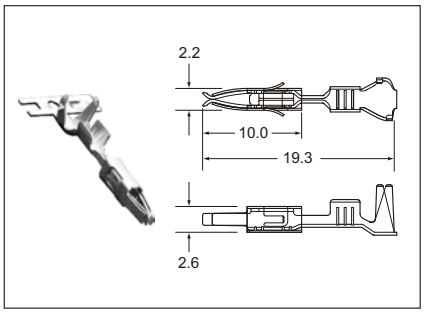

ITEM NO.	WIRE RANGE		MATERIAL	PLATINGS	Q'TY	APPLICATOR	DIES
	A.W.G.	mm^2			REEL		
1211A0161	22-18	0.5-0.85	Copper Alloy Stainless Steel	Pre-Tin	3500	CDM-95024-M	CDT-95024-M

060 DF
M-PACK 150 SERIES
UNSEALED

SPECIFICATIONS

Material	Connector	NY66
	Male Terminal	-
	Female Terminal	-
Operating Temperature Range		-40°C~+125°C
Voltage Drop		-
Isolation Resistance		100MΩ
Dielectric Resistance		1000V
Applicable Wire Size		-
Maximum Electric Current		-

060 DF
M-PACK 150 SERIES
UNSEALED

HOUSING

POLE		FEMALE
2		**3202A0402**  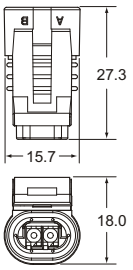 **100 PCS**
2		**3202A0419**  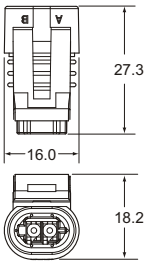 **100 PCS**
3		**3203A0402**  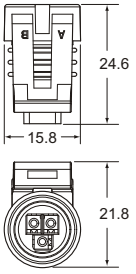 **100 PCS**
4		**3204A0402**  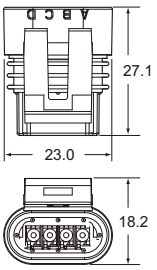 **100 PCS**

- HOUSING (UNIT:mm)
  MATERIAL:NY66
  COLOR:HOUSING:3202A0402, 3203A0402, 3204A0402:BLACK
  3202A0419:GREY

060 DF
M-PACK 150 SERIES
UNSEALED

HOUSING

POLE	FEMALE	LOCK	LOCK
16	**3216A0402** 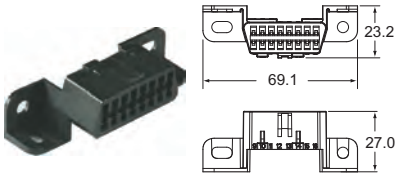 **100 PCS**	**4216A0402** 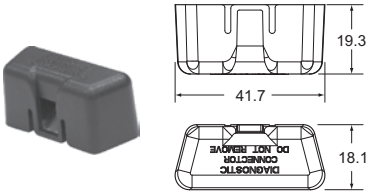 **50 PCS**	**3716A0406** 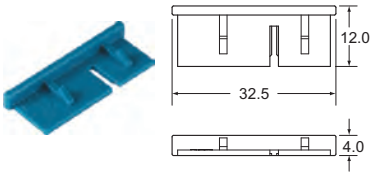 **100 PCS**

POLE	FEMALE	LOCK
3	**3203A0419** 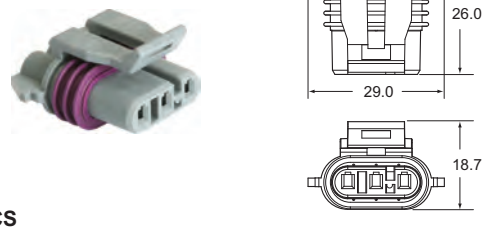 **100 PCS**	**3703A0413** 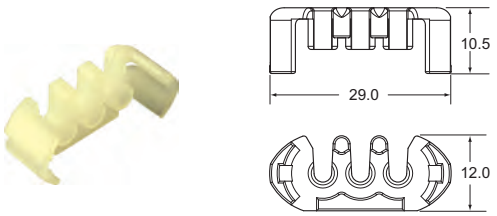 **100 PCS**

POLE	FEMALE	LOCK
2	**3202A0425** 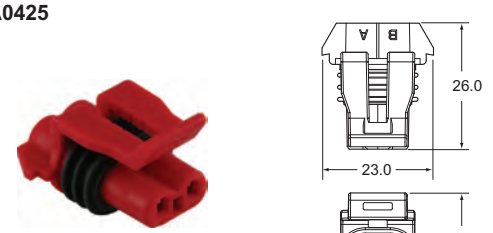 **100 PCS**	**3702A0426** 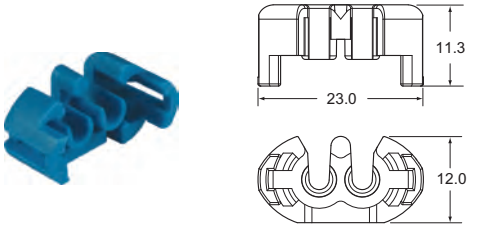 **100 PCS**

- HOUSING (UNIT:mm)
  MATERIAL:NY66
  COLOR:HOUSING:3216A0402:BLACK
  3203A0419:GREY
  3202A0425:RED
  LOCK:4216A0402:BLACK
  3716A0406:BLUE
  3703A0413:YELLOW
  3702A0426:BLUE

060 DF
M-PACK 150 SERIES
UNSEALED

HOUSING

POLE	FEMALE	LOCK
2	**3202A0432**  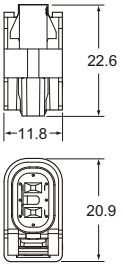 **100 PCS**	**3702A0439**  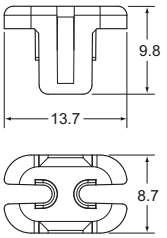 **100 PCS**

- HOUSING (UNIT:mm)
  MATERIAL:NY66
  COLOR:HOUSING:BLACK
  LOCK:GREY

070 SERIES

AUTOMOTIVE CONNECTORS



070 AM
EJ-II SERIES
SEALED

CONSTRUCTION

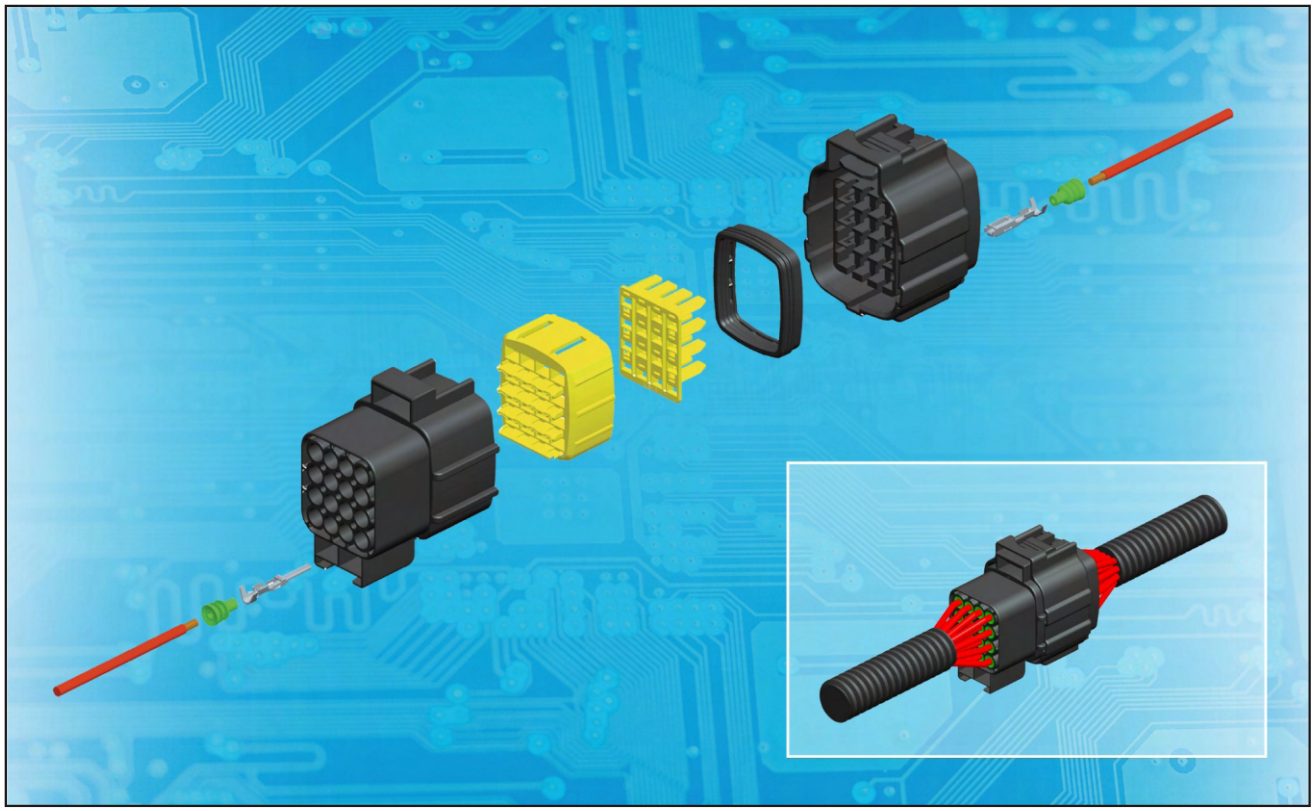

SPECIFICATIONS

Material	Connector	PBT
	Male Terminal	BRASS
	Female Terminal	BRASS OR COPPER ALLOY
Operating Temperature Range		-30°C~+105°C
Voltage Drop		3mV/A
Isolation Resistance		100MΩ
Dielectric Resistance		1000V
Applicable Wire Size		0.3mm² ~1.25mm² (22 AWG~16 AWG)
Maximum Electric Current		9A

070 AM
EJ-II SERIES
SEALED

TERMINAL

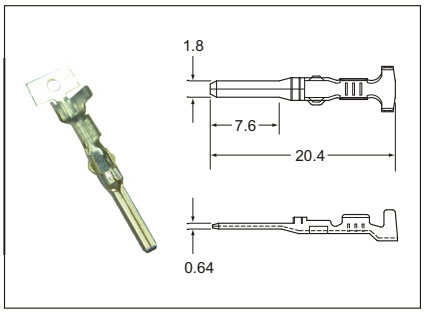

ITEM NO.	WIRE RANGE		MATERIAL	PLATINGS	Q'TY REEL	APPLICATOR	DIES
	A.W.G.	mm^2					
1101A0030	22-20	0.3-0.5	Brass	Pre-Tin	5000	CDM-96023-S	CDT-96023-S
1101A0031	20-16	0.5-1.25	Brass	Pre-Tin	5000	CDM-96023-M	CDT-96023-M

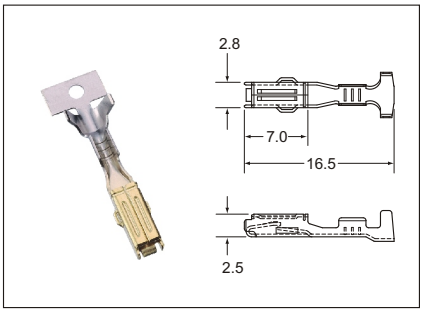

ITEM NO.	WIRE RANGE		MATERIAL	PLATINGS	Q'TY REEL	APPLICATOR	DIES
	A.W.G.	mm^2					
1200A0030	22-20	0.3-0.5	Brass	None	5000	CDM-94122-S	CDT-94122-S
1200A0031	20-16	0.5-1.25	Brass	None	5000	CDM-94122-M	CDT-94122-M
1201A0030	22-20	0.3-0.5	Brass	Pre-Tin	5000	CDM-94122-S	CDT-94122-S
1201A0031	20-16	0.5-1.25	Brass	Pre-Tin	5000	CDM-94122-M	CDT-94122-M
1221A0030	22-20	0.3-0.5	Phosphor Bronze	Pre-Tin	5000	CDM-94122-S	CDT-94122-S
1221A0031	20-16	0.5-1.25	Phosphor Bronze	Pre-Tin	5000	CDM-94122-M	CDT-94122-M
1206A0030	22-20	0.3-0.5	Brass	Nickel-gold	5000	CDM-94122-S	CDT-94122-S
1206A0031	20-16	0.5-1.25	Brass	Nickel-gold	5000	CDM-94122-M	CDT-94122-M

RUBBER SEAL

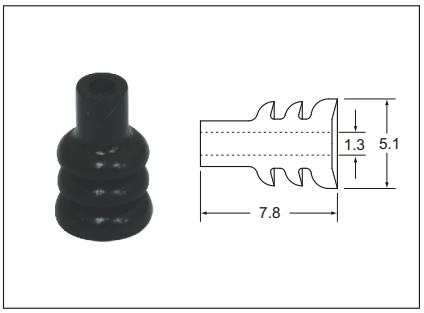

ITEM NO.	MATERIAL	COLOR	Q'TY BAG	REMARKS
7000A0002	SILICONE	BLACK	1000	WIRE RANGE 0.2~0.5mm^2 ΦOD 1.4~2.4mm

070 AM
EJ-II SERIES
SEALED

RUBBER SEAL

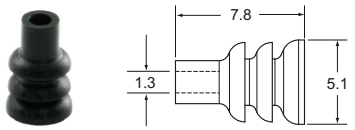

ITEM NO.	MATERIAL	COLOR	Q'TY BAG	WIRE INSULATION DIAMETER(mm)
7001A0012	NBR	BLACK	1000	1.4-2.4

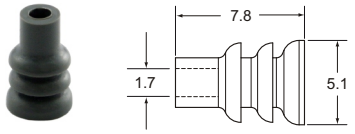

ITEM NO.	MATERIAL	COLOR	Q'TY BAG	WIRE INSULATION DIAMETER(mm)
7001A0029	SILICONE	GREY	1000	1.8-2.3

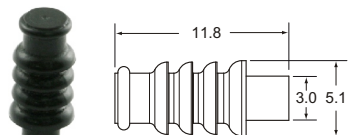

ITEM NO.	MATERIAL	COLOR	Q'TY BAG	WIRE INSULATION DIAMETER(mm)
7000A0012	NBR	BLACK	1000	-

070 AM
EJ-II SERIES
SEALED

HOUSING

POLE	MALE	LOCK	FEMALE	LOCK
2	**3102A0012** 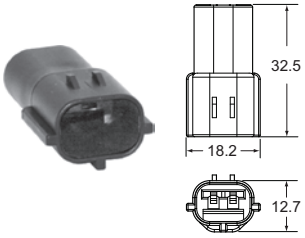 **100 PCS**	**3602A0013** 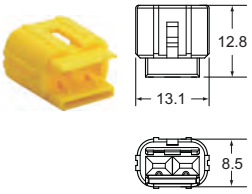 **250 PCS**	**3202A0012** 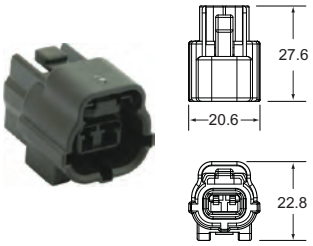 **50 PCS**	**3702A0013** 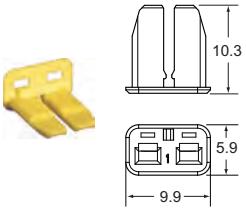 **500 PCS**
4	**3104A0012** 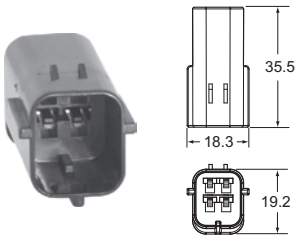 **100 PCS**	**3604A0013** 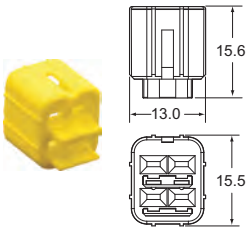 **100 PCS**	**3204A0012** 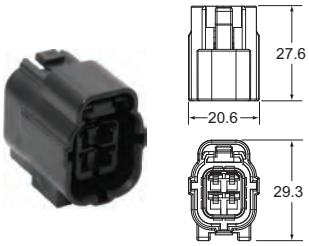 **50 PCS**	**3704A0013** 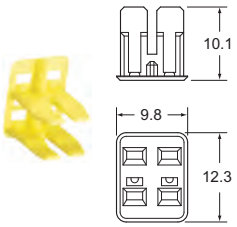 **250 PCS**
6			**3206A0012** 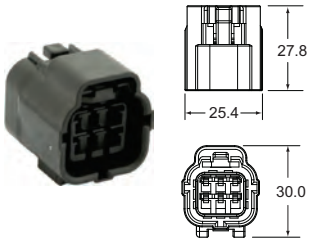 **50 PCS**	**3706A0013** 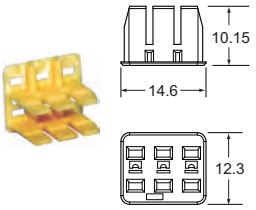 **100 PCS**
8		**3608A0014** 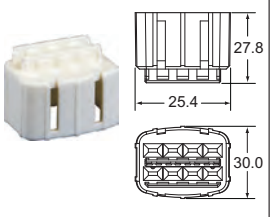 **100 PCS**		

• HOUSING (UNIT:mm)
MATERIAL:PBT
COLOR:HOUSING:BLACK
LOCK:3602A0013, 3604A0013, 3702A0013, 3704A0013, 3706A0013:YELLOW
3608A0014:WHITE

070 AM
EJ-II SERIES
SEALED

HOUSING

POLE	MALE	LOCK	FEMALE	LOCK
10			3210A0012 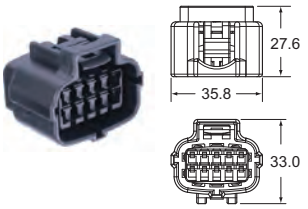 50 PCS	3710A0014 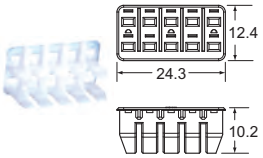 100 PCS
16	3116A0012 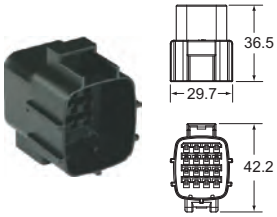 25 PCS	3616A0013 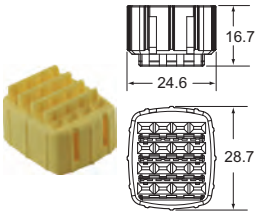 100 PCS	3216A0012 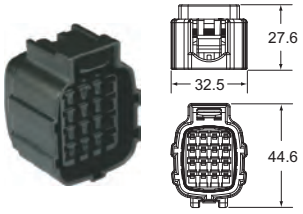 50 PCS	3716A0013 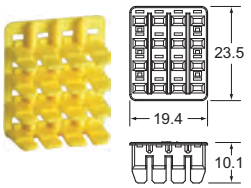 100 PCS

- HOUSING (UNIT:mm)
  MATERIAL:PBT
  COLOR:HOUSING:BLACK
  LOCK:3710A0014:WHITE
  3616A0013, 3716A0013:YELLOW

070 AM
EJ-II SERIES
SEALED

HOUSING:DBL TYPE

POLE		FEMALE
2		3202A0352  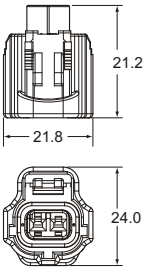 100 PCS

POLE		FEMALE
2		3202A0569  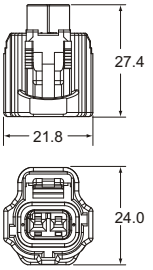 100 PCS

- HOUSING (UNIT:mm)
  MATERIAL:PBT
  COLOR:3202A0352:BLACK
  3202A0569:GREY

070 AM
MULTILOCK SERIES
UNSEALED

SPECIFICATIONS

Material	Connector	PBT
	Male Terminal	BRASS
	Female Terminal	BRASS OR PHOSPHOR BRONZE
Operating Temperature Range		-30°C~+105°C
Voltage Drop		5mV/A
Isolation Resistance		100MΩ
Dielectric Resistance		1800V
Applicable Wire Size		0.2mm^2 ~1.25mm^2 (24 AWG~16 AWG)
Maximum Electric Current		7A

070 AM
MULTILOCK SERIES
UNSEALED

TERMINAL

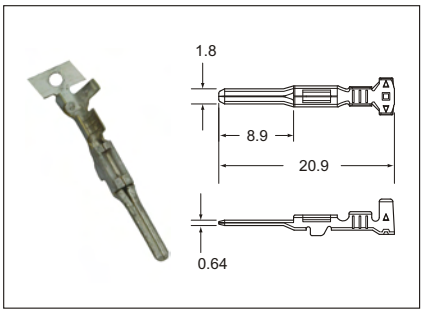

ITEM NO.	WIRE RANGE		MATERIAL	PLATINGS	Q'TY REEL	APPLICATOR	DIES
	A.W.G.	mm^2					
1101A0095	24-22	0.2-0.3	Brass	Pre-Tin	4000	CDM-94111-S	CDT-94111-S

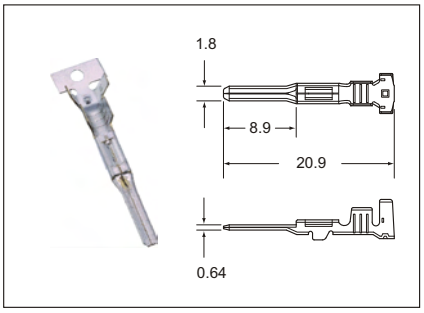

ITEM NO.	WIRE RANGE		MATERIAL	PLATINGS	Q'TY REEL	APPLICATOR	DIES
	A.W.G.	mm^2					
1101A0096	20-16	0.5-1.25	Brass	Pre-Tin	3000	CDM-94111-M	CDT-94111-M

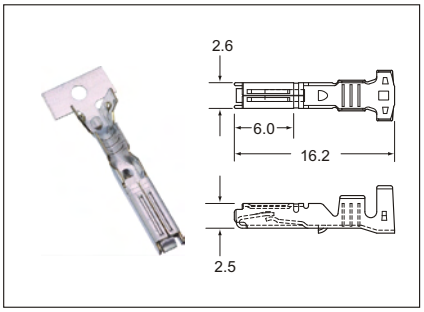

ITEM NO.	WIRE RANGE		MATERIAL	PLATINGS	Q'TY REEL	APPLICATOR	DIES
	A.W.G.	mm^2					
1201A0095	24-22	0.2-0.3	Brass	Pre-Tin	4000	CDM-94112-S	CDT-94112-S
1221A0095	24-22	0.2-0.3	Phosphor Bronze	Pre-Tin	4000	CDM-94112-S	CDT-94112-S
1201A0096	20-16	0.5-1.25	Brass	Pre-Tin	4000	CDM-94112-M	CDT-94112-M
1221A0096	20-16	0.5-1.25	Phosphor Bronze	Pre-Tin	4000	CDM-94112-M	CDT-94112-M

BODY FASTENING CLAMP (CLIP)

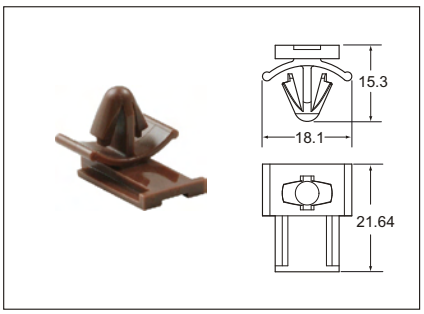

ITEM NO.	MATERIAL	COLOR	Q'TY BAG	REMARKS
9900A0760	NY66	Brown		

070 AM
MULTILOCK SERIES
UNSEALED

HOUSING

POLE	MALE	FEMALE
6		**3206A0764**  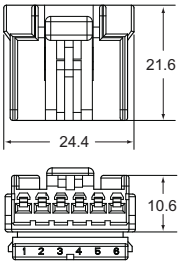 **100 PCS**
8		**3208A0764**  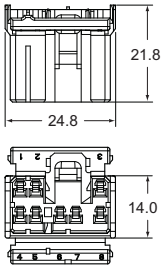 **100 PCS**
12		**3212A0764**  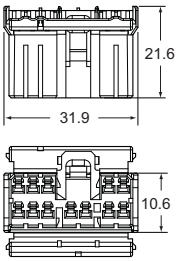 **25 PCS**
15	**3115A0764**  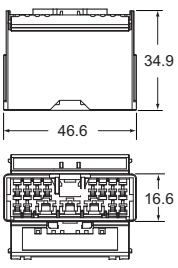 **25 PCS**	

• HOUSING (UNIT:mm)
MATERIAL:PBT
COLOR:WHITE

070 MX
VB WIRE-TO-WIRE SYSTEM
UNSEALED

CONSTRUCTION

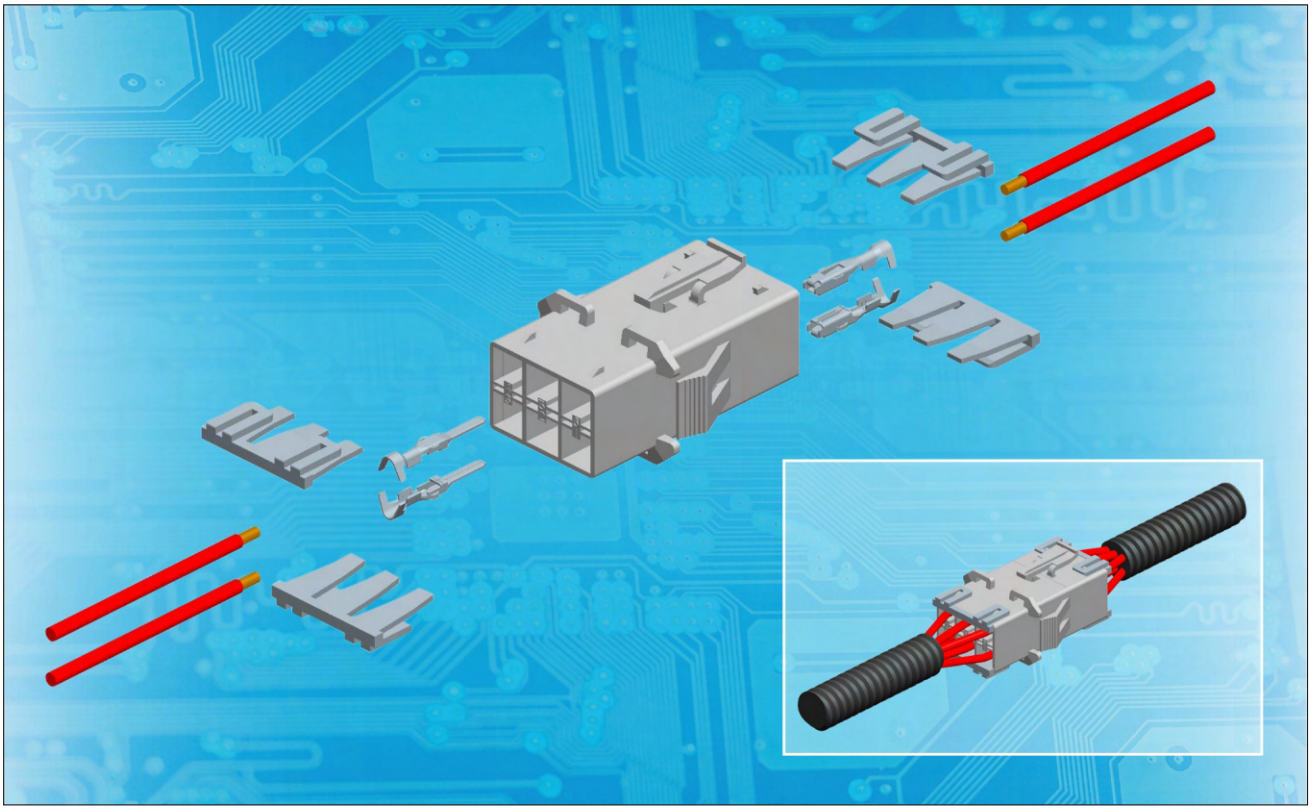

SPECIFICATIONS

Material	Connector	PBT OR NY66
	Male Terminal	BRASS
	Female Terminal	PHOSPHOR BRONZE
Operating Temperature Range		-40°C~+120°C
Voltage Drop		10mV/A
Isolation Resistance		100MΩ
Dielectric Resistance		1500V
Applicable Wire Size		0.85mm^2 ~2.0mm^2 (18 AWG~14 AWG)
Maximum Electric Current		12A

070 MX
VB WIRE-TO-WIRE SYSTEM
UNSEALED

TERMINAL

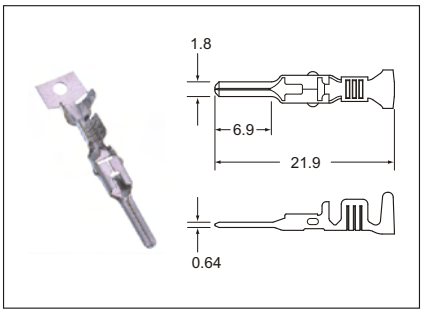

ITEM NO.	WIRE RANGE A.W.G.	WIRE RANGE mm²	MATERIAL	PLATINGS	Q'TY REEL	APPLICATOR	DIES
◎ 1101Z0005	22-20	0.3-0.5	Brass	Pre-Tin	3000	CDM-93049-S	CDT-93049-S
1101Z0007	18-14	0.85-2.0	Brass	Pre-Tin	3000	CDM-93049-M	CDT-93049-M

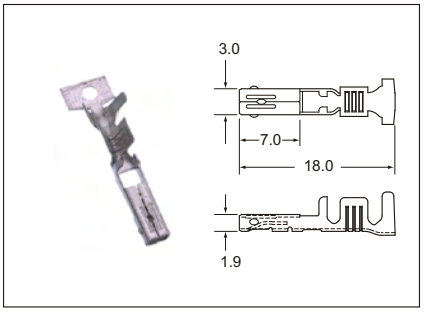

ITEM NO.	WIRE RANGE A.W.G.	WIRE RANGE mm²	MATERIAL	PLATINGS	Q'TY REEL	APPLICATOR	DIES
◎ 1221Z0005	22-20	0.3-0.5	Phosphor Bronze	Pre-Tin	3000	CDM-94001-S	CDT-94001-S
1221Z0007	18-14	0.85-2.0	Phosphor Bronze	Pre-Tin	3000	CDM-94001-M	CDT-94001-M

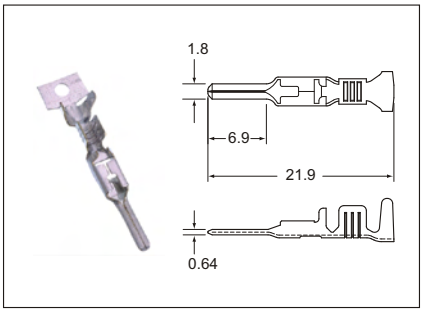

ITEM NO.	WIRE RANGE A.W.G.	WIRE RANGE mm²	MATERIAL	PLATINGS	Q'TY REEL	APPLICATOR	DIES
1101Z0012	18-14	0.85-2.0	Brass	Pre-Tin	3000	CDM-93049-L	CDT-93049-L

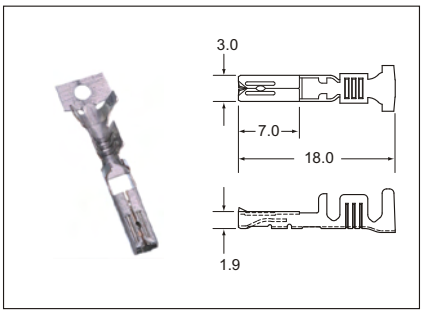

ITEM NO.	WIRE RANGE A.W.G.	WIRE RANGE mm²	MATERIAL	PLATINGS	Q'TY REEL	APPLICATOR	DIES
1221Z0012	18-14	0.85-2.0	Phosphor Bronze	Pre-Tin	3000	CDM-94001-L	CDT-94001-L

ALL LISTED
◎ : NOT RU AND C-RU LISTED

070 MX
VB WIRE-TO-WIRE SYSTEM
UNSEALED

HOUSING

POLE	M + F	M + F	LOCK
1	3001Z0014  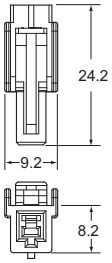 100 PCS	3001Z0004  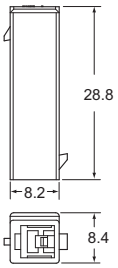 100 PCS	
2	3002Z0014  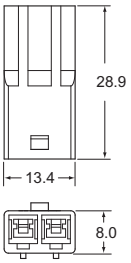 200 PCS	3002Z0004  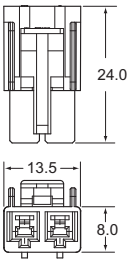 100 PCS	4204Z0001  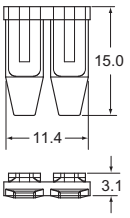 1000 PCS
3	3003Z0014  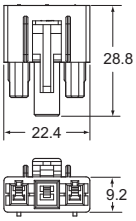 100 PCS	3003Z0004  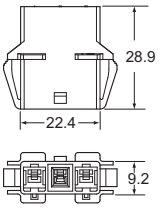 100 PCS	4206Z0001  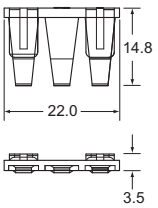 1000 PCS
4	3004Z0014  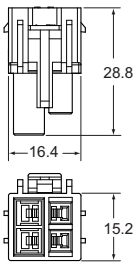 100 PCS	3004Z0004  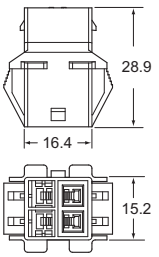 100 PCS	4204Z0001  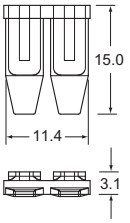 1000 PCS

- HOUSING (UNIT:mm)
  MATERIAL:HOUSING:PBT
  LOCK:NY66
  COLOR:HOUSING:WHITE
  LOCK:NATURAL

ALL LISTED

070 MX
VB WIRE-TO-WIRE SYSTEM
UNSEALED

HOUSING

POLE	M + F	M + F	LOCK
6	**3006Z0014**  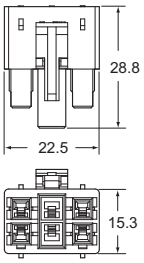 **100 PCS**	**3006Z0004**  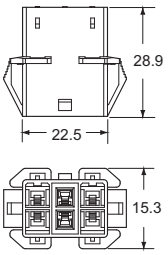 **50 PCS**	**4206Z0001**  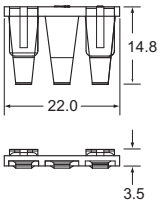 **1000 PCS**

POLE	M + F	LOCK
6	**3006Z0024** ◎  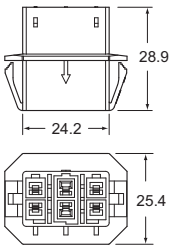 **50 PCS**	**4206Z0001**  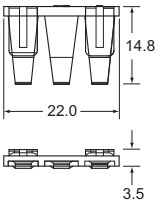 **1000 PCS**

POLE	M + F	LOCK	LOCK
9	**3009Z0034**  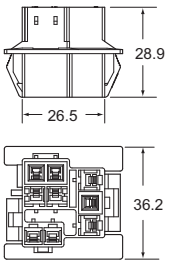 **25 PCS**	**4204Z0001**  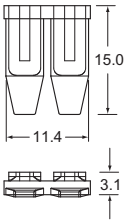 **1000 PCS**	**4206Z0001**  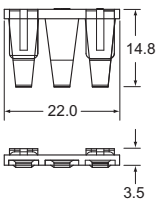 **1000 PCS**

- HOUSING (UNIT:mm)
  MATERIAL:HOUSING:PBT
  LOCK:NY66
  COLOR:HOUSING:WHITE
  LOCK:NATURAL

ALL LISTED
◎: NOT RU AND C-RU LISTED

070 YK
SDL SERIES
SEALED

CONSTRUCTION

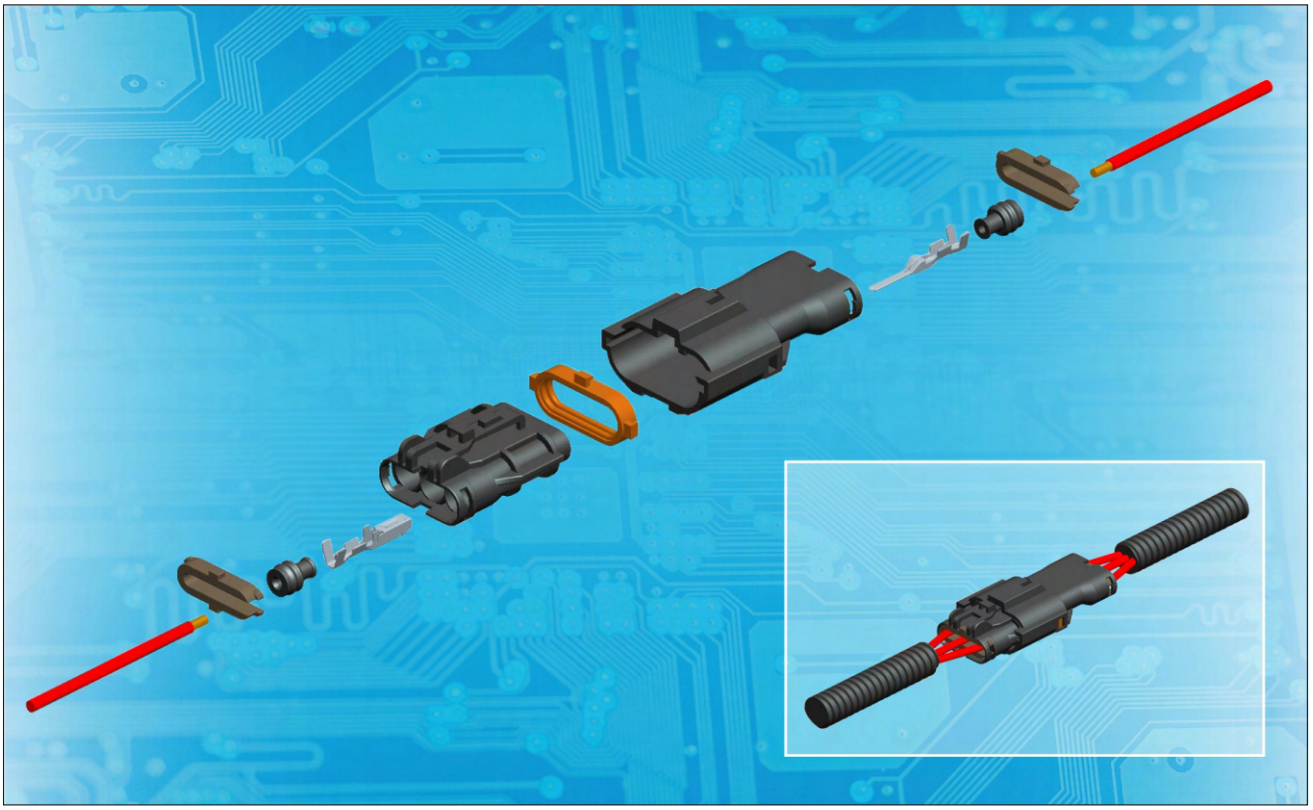

SPECIFICATIONS

Material	Connector	PBT
	Male Terminal	BRASS
	Female Terminal	COPPER ALLOY
Operating Temperature Range		-40°C~+120°C
Voltage Drop		3mV/A
Isolation Resistance		100MΩ
Dielectric Resistance		1000V
Applicable Wire Size		0.3mm^2 ~0.5mm^2 (22 AWG~20 AWG)
Maximum Electric Current		8A

070 YK
SDL SERIES
SEALED

TERMINAL

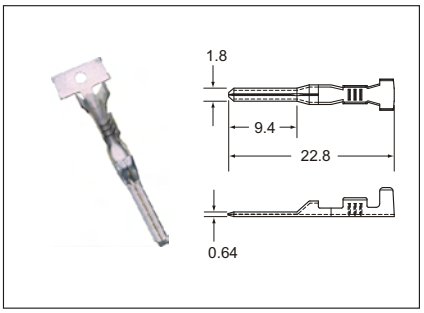

ITEM NO.	WIRE RANGE A.W.G.	WIRE RANGE mm²	MATERIAL	PLATINGS	Q'TY REEL	APPLICATOR	DIES
1101A0190	22-20	0.3-0.5	Brass	Pre-Tin	4000	CDM-95021-S	CDT-95021-S

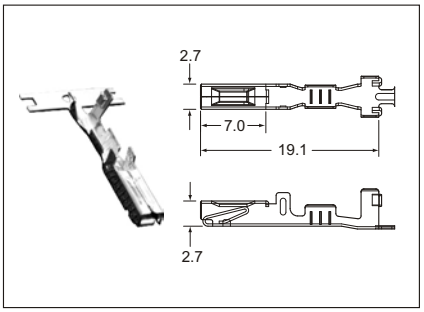

ITEM NO.	WIRE RANGE A.W.G.	WIRE RANGE mm²	MATERIAL	PLATINGS	Q'TY REEL	APPLICATOR	DIES
1211A0450	22-20	0.3-0.5	Copper Alloy	Pre-Tin	4000	CDM-96016-S	CDT-96016-S

HOUSING

POLE	MALE	FEMALE	LOCK
3	**3103A0459**  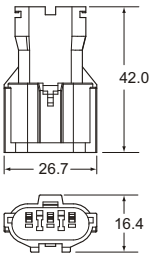 **100 PCS**	**3203A0459**  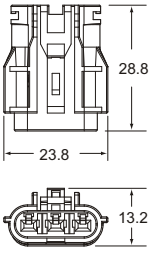 **100 PCS**	**4203A0450**  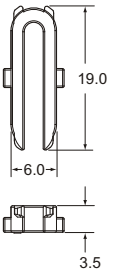 **500 PCS**

- HOUSING (UNIT:mm)
  MATERIAL:PBT
  COLOR:HOUSING:GREY
  LOCK:BROWN

070 RS
SEALED

SPECIFICATIONS

Material	Connector	-
	Male Terminal	BRASS
	Female Terminal	PHOSPHOR BRONZE
Operating Temperature Range		-40°C~+120°C
Voltage Drop		3mV/A
Isolation Resistance		-
Dielectric Resistance		-
Applicable Wire Size		0.3mm^2 ~2.0mm^2 (22 AWG~14 AWG)
Maximum Electric Current		25A

070 RS

SEALED

TERMINAL

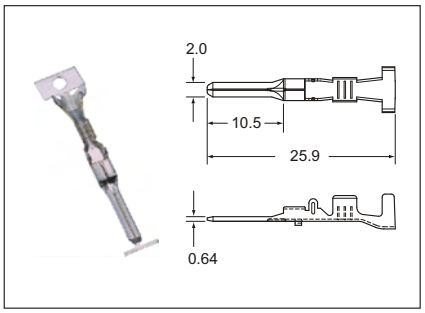

ITEM NO.	WIRE RANGE		MATERIAL	PLATINGS	Q'TY REEL	APPLICATOR	DIES
	A.W.G.	mm^2					
1101A0060	22-20	0.3-0.5	Brass	Pre-Tin	4000	CDM-94110-S	CDT-94110-S
1101A0062	16-14	1.25-2.0	Brass	Pre-Tin	3500	CDM-94110-L	CDT-94110-L

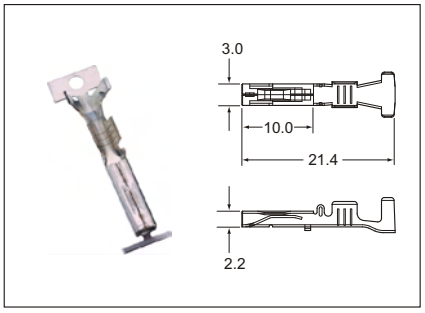

ITEM NO.	WIRE RANGE		MATERIAL	PLATINGS	Q'TY REEL	APPLICATOR	DIES
	A.W.G.	mm^2					
1221A0157	18-14	0.85-2.0	Phosphor Bronze	Pre-Tin	3000	CDM-94136-M	CDT-94136-M

090 SERIES

AUTOMOTIVE CONNECTORS



090 SMTO
MT SERIES
SEALED

CONSTRUCTION

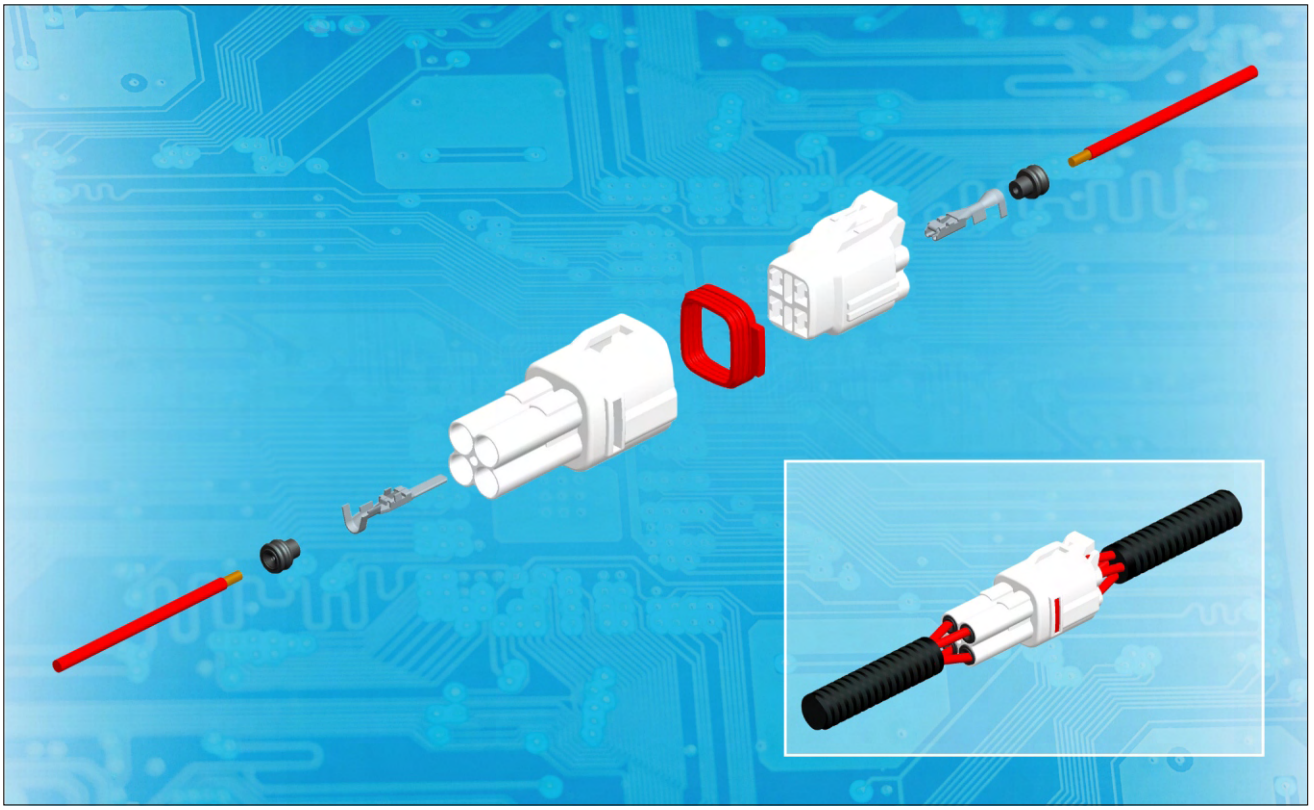

SPECIFICATIONS

Material	Connector	PBT OR NYLON
	Male Terminal	BRASS
	Female Terminal	BRASS OR COPPER ALLOY
Operating Temperature Range		-40°C~+120°C
Voltage Drop		3mV/A
Isolation Resistance		100MΩ
Dielectric Resistance		1000V
Applicable Wire Size		0.3mm² ~2.0mm² (22 AWG~14 AWG)
Maximum Electric Current		13A

090 SMTO
MT SERIES
SEALED

TERMINAL

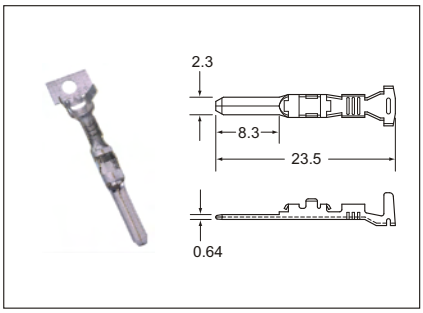

ITEM NO.	WIRE RANGE		MATERIAL	PLATINGS	Q'TY	APPLICATOR	DIES
	A.W.G.	mm²			REEL		
1100A0005	22-20	0.3-0.5	Brass	None	5000	CDM-94118-S	CDT-94118-S
1100A0006	18-16	0.85-1.25	Brass	None	5000	CDM-94118-M	CDT-94118-M
1100A0007	14	2.0	Brass	None	5000	CDM-94118-L	CDT-94118-L
1101A0005	22-20	0.3-0.5	Brass	Pre-Tin	5000	CDM-94118-S	CDT-94118-S
1101A0006	18-16	0.85-1.25	Brass	Pre-Tin	5000	CDM-94118-M	CDT-94118-M
1101A0007	14	2.0	Brass	Pre-Tin	5000	CDM-94118-L	CDT-94118-L
1106A0005	22-20	0.3-0.5	Brass	Nickel-gold	5000	CDM-94118-S	CDT-94118-S
1106A0006	18-16	0.85-1.25	Brass	Nickel-gold	5000	CDM-94118-M	CDT-94118-M
1106A0007	14	2.0	Brass	Nickel-gold	5000	CDM-94118-L	CDT-94118-L

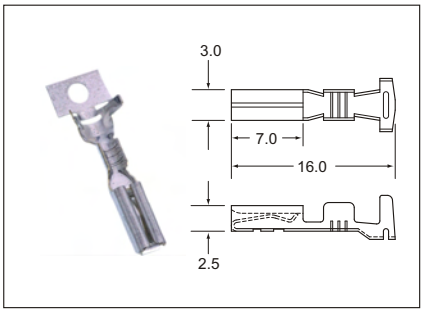

ITEM NO.	WIRE RANGE		MATERIAL	PLATINGS	Q'TY	APPLICATOR	DIES
	A.W.G.	mm²			REEL		
1201A0005	22-20	0.3-0.5	Brass	Pre-Tin	5000	CDM-94117-S	CDT-94117-S
1201A0006	18-16	0.85-1.25	Brass	Pre-Tin	5000	CDM-94117-M	CDT-94117-M
1201A0007	14	2.0	Brass	Pre-Tin	5000	CDM-94117-L	CDT-94117-L
1211A0006	18-16	0.85-1.25	Copper Alloy	Pre-Tin	5000	CDM-94117-M	CDT-94117-M
1211A0007	14	2.0	Copper Alloy	Pre-Tin	5000	CDM-94117-L	CDT-94117-L

090 SMTO
MT SERIES
SEALED

RUBBER SEAL

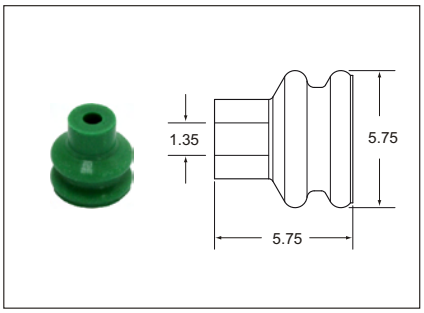

ITEM NO.	MATERIAL	COLOR	Q'TY BAG	WIRE INSULATION DIAMETER(mm)
7001A0087	SILICONE	GREEN	1000	1.3-1.7

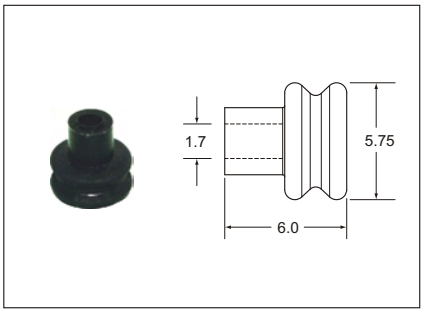

ITEM NO.	MATERIAL	COLOR	Q'TY BAG	WIRE INSULATION DIAMETER(mm)
7001A0092	SILICONE	BLACK	1000	1.7-2.7

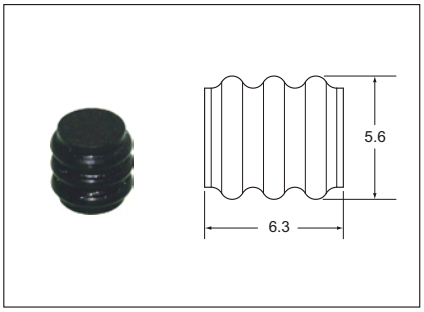

ITEM NO.	MATERIAL	COLOR	Q'TY BAG	WIRE INSULATION DIAMETER(mm)
7000A0092	SILICONE	BLACK	1000	-

090 SMTO
MT SERIES
SEALED

HOUSING:NY66

POLE	MALE	FEMALE
4	**3104A0007**  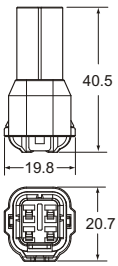 **100 PCS**	**3204A0007**  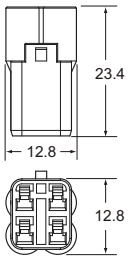 **100 PCS**
6	**3106A0007**  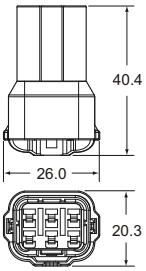 **100 PCS**	**3206A0097**  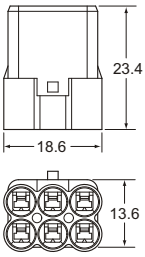 **100 PCS**

HOUSING:PBT

POLE	MALE	FEMALE
2	**3102A0144**  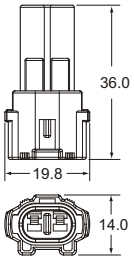 **100 PCS**	**3202A0144**  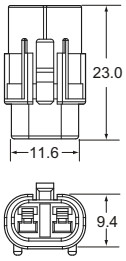 **100 PCS**
3	**3103A0144**  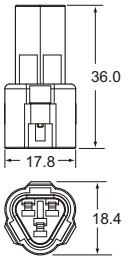 **100 PCS**	**3203A0144**  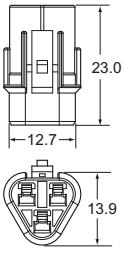 **100 PCS**

- HOUSING (UNIT:mm)
  COLOR:3104A0007, 3204A0007, 3106A0007:GREEN
  3102A0144, 3103A0144, 3202A0144, 3203A0144:WHITE

090 SMTO
MT SERIES
SEALED

HOUSING

POLE	MALE	FEMALE
4	**3104A0144**  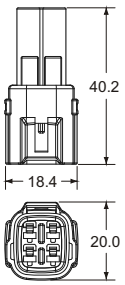 **100 PCS**	**3204A0144**  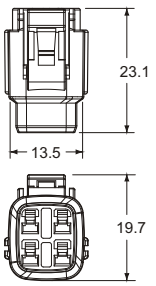 **100 PCS**

POLE		FEMALE
2		**3202A0812**  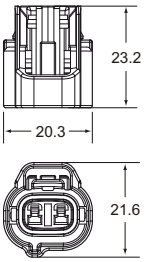 **100 PCS**

POLE		FEMALE
2		**3202A0820**  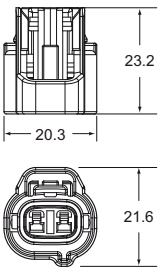 **100 PCS**

- HOUSING (UNIT:mm)
  MATERIAL:PBT
  COLOR:3104A0144, 3204A0144:WHITE
  3202A0812:BLACK
  3202A0820:BROWN

090 SMTO
MT SERIES
SEALED

HOUSING

POLE		FEMALE
2		3202A0839  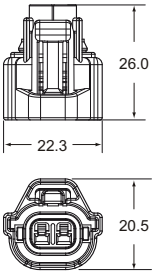 100 PCS

• HOUSING (UNIT:mm)
MATERIAL:PBT
COLOR:3202A0839:GREY

090 SMTO
HM SERIES
SEALED

CONSTRUCTION

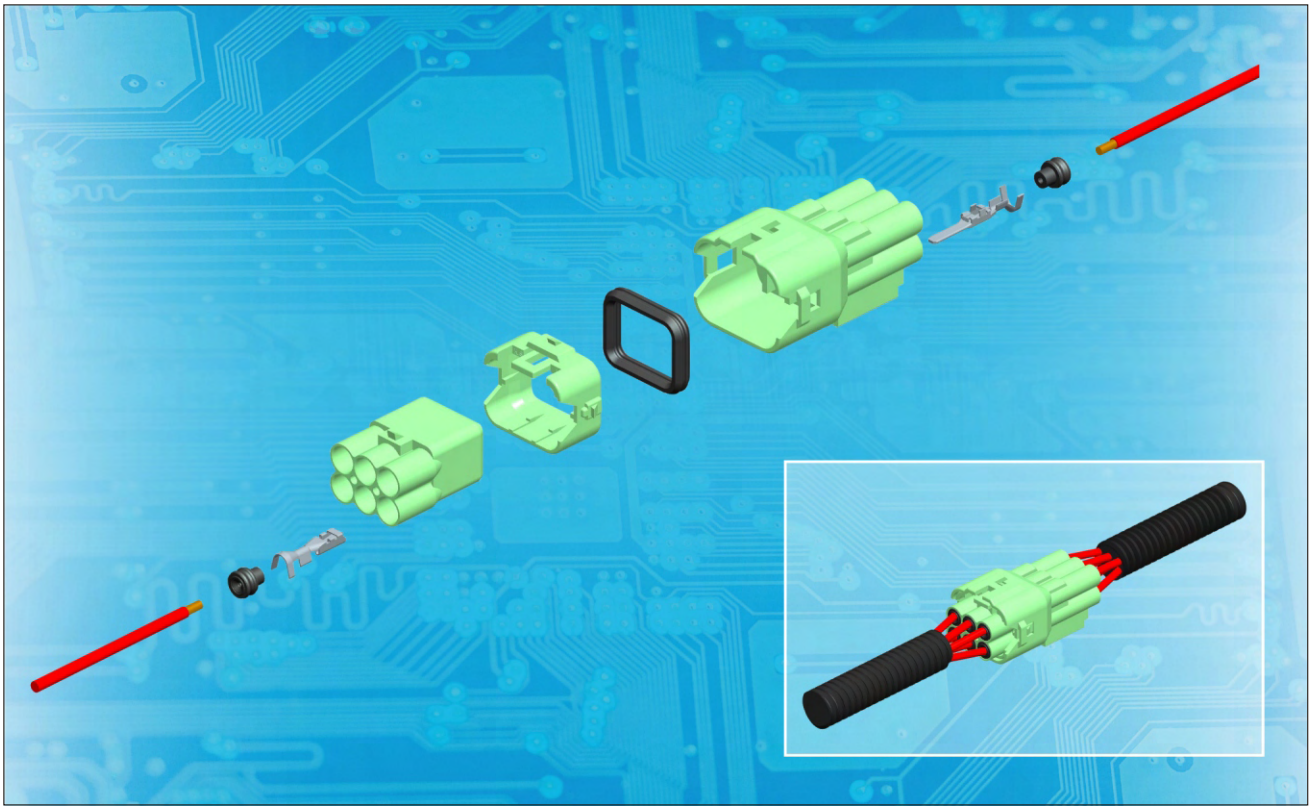

SPECIFICATIONS

Material	Connector	NY66
	Male Terminal	BRASS
	Female Terminal	BRASS OR COPPER ALLOY
Operating Temperature Range		-40°C~+120°C
Voltage Drop		3mV/A
Isolation Resistance		100MΩ
Dielectric Resistance		1000V
Applicable Wire Size		0.3mm^2 ~2.0mm^2 (22 AWG~14 AWG)
Maximum Electric Current		13A

090 SMTO
HM SERIES
SEALED

TERMINAL

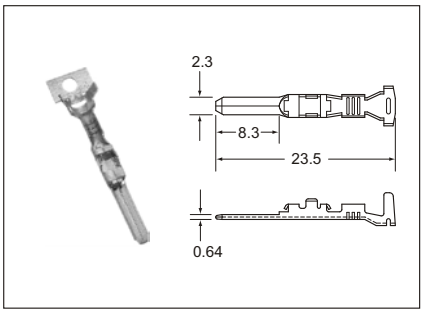

ITEM NO.	WIRE RANGE		MATERIAL	PLATINGS	Q'TY	APPLICATOR	DIES
	A.W.G.	mm²			REEL		
1100A0005	22-20	0.3-0.5	Brass	None	5000	CDM-94118-S	CDT-94118-S
1100A0006	18-16	0.85-1.25	Brass	None	5000	CDM-94118-M	CDT-94118-M
1100A0007	14	2.0	Brass	None	5000	CDM-94118-L	CDT-94118-L
1101A0005	22-20	0.3-0.5	Brass	Pre-Tin	5000	CDM-94118-S	CDT-94118-S
1101A0006	18-16	0.85-1.25	Brass	Pre-Tin	5000	CDM-94118-M	CDT-94118-M
1101A0007	14	2.0	Brass	Pre-Tin	5000	CDM-94118-L	CDT-94118-L
1106A0005	22-20	0.3-0.5	Brass	Nickel-gold	5000	CDM-94118-S	CDT-94118-S
1106A0006	18-16	0.85-1.25	Brass	Nickel-gold	5000	CDM-94118-M	CDT-94118-M
1106A0007	14	2.0	Brass	Nickel-gold	5000	CDM-94118-L	CDT-94118-L

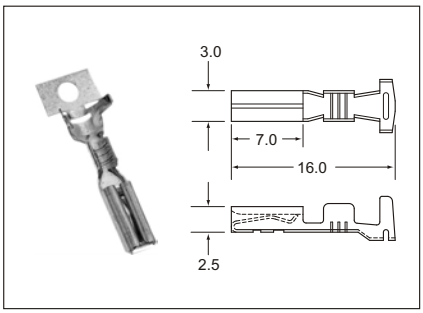

ITEM NO.	WIRE RANGE		MATERIAL	PLATINGS	Q'TY	APPLICATOR	DIES
	A.W.G.	mm²			REEL		
1201A0005	22-20	0.3-0.5	Brass	Pre-Tin	5000	CDM-94117-S	CDT-94117-S
1201A0006	18-16	0.85-1.25	Brass	Pre-Tin	5000	CDM-94117-M	CDT-94117-M
1201A0007	14	2.0	Brass	Pre-Tin	5000	CDM-94117-L	CDT-94117-L
1211A0006	18-16	0.85-1.25	Copper Alloy	Pre-Tin	5000	CDM-94117-M	CDT-94117-M
1211A0007	14	2.0	Copper Alloy	Pre-Tin	5000	CDM-94117-L	CDT-94117-L

090 SMTO
HM SERIES
SEALED

RUBBER SEAL

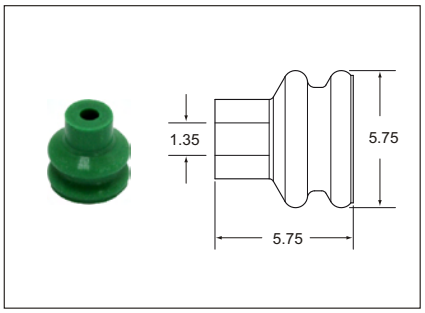

ITEM NO.	MATERIAL	COLOR	Q'TY BAG	WIRE INSULATION DIAMETER(mm)
7001A0087	SILICONE	GREEN	1000	1.3-1.7

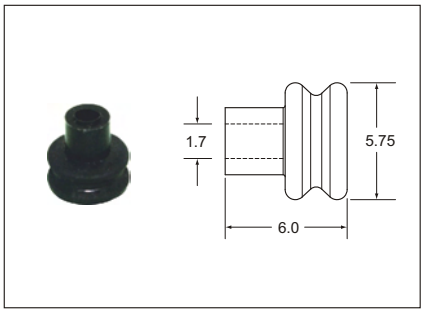

ITEM NO.	MATERIAL	COLOR	Q'TY BAG	WIRE INSULATION DIAMETER(mm)
7001A0092	SILICONE	BLACK	1000	1.7-2.7

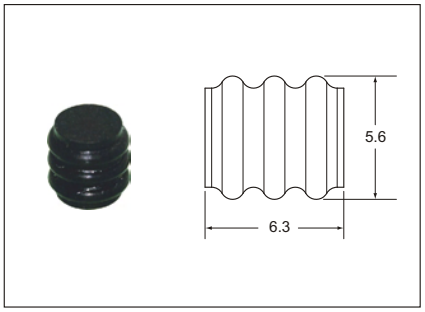

ITEM NO.	MATERIAL	COLOR	Q'TY BAG	WIRE INSULATION DIAMETER(mm)
7000A0092	SILICONE	BLACK	1000	-

090 SMTO
HM SERIES
SEALED

HOUSING

POLE	MALE	FEMALE
2	**3102A0097**  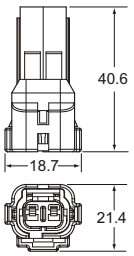 **100 PCS**	**3202A0097**  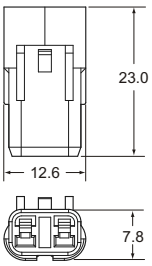 **100 PCS**
3	**3103A0097**  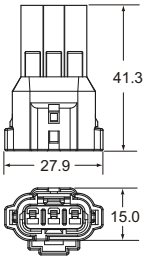 **100 PCS**	**3203A0097**  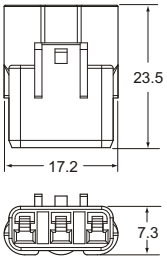 **100 PCS**
4	**3104A0097**  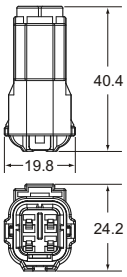 **100 PCS**	**3204A0007**  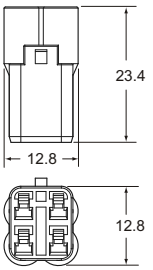 **100 PCS**
6	**3106A0097**  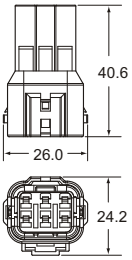 **50 PCS**	**3206A0097**  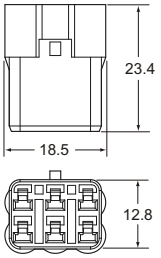 **100 PCS**

• HOUSING (UNIT:mm)
MATERIAL:NY66
COLOR:GREEN

090 KST JOINT SERIES

UNSEALED

CONSTRUCTION

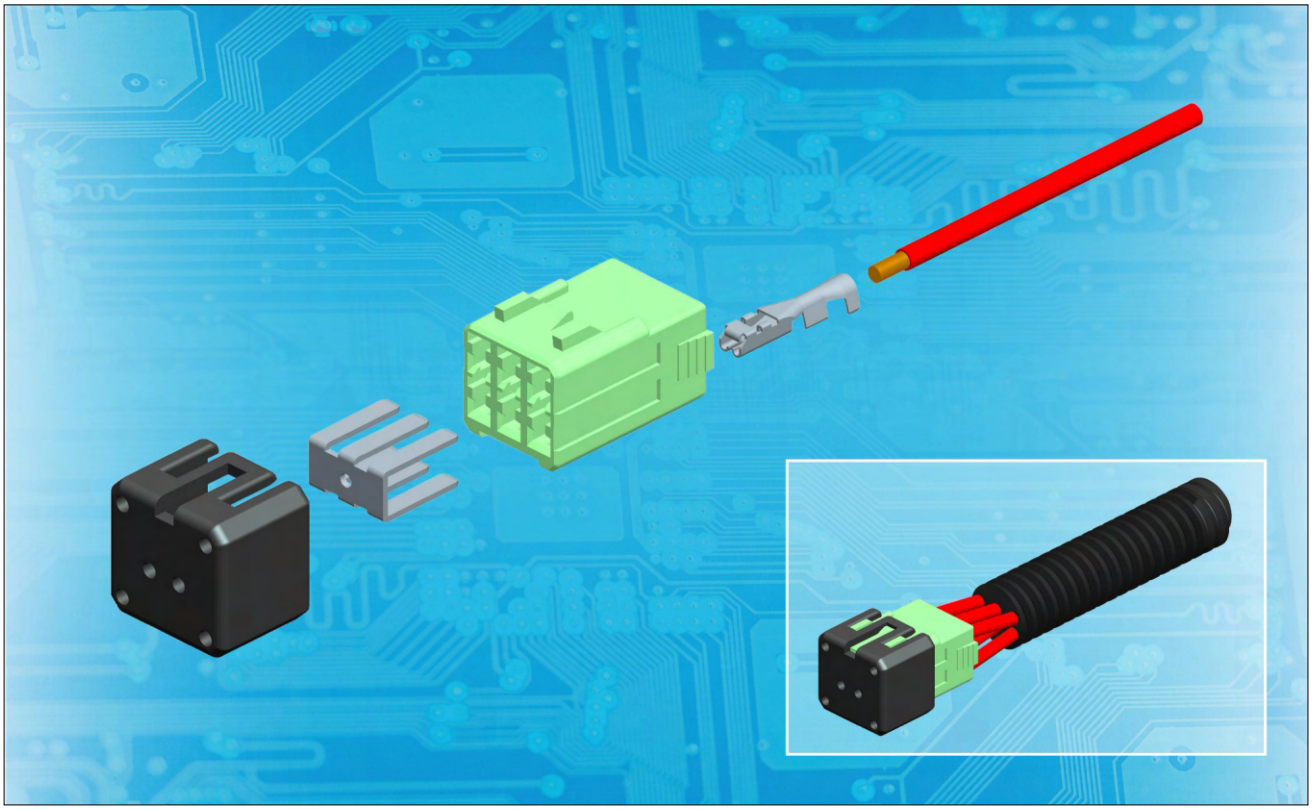

SPECIFICATIONS

Material	Connector	NY66
	Male Terminal	BRASS
	Female Terminal	BRASS OR COPPER ALLOY
Operating Temperature Range		-40°C~+120°C
Voltage Drop		3mV/A
Isolation Resistance		100MΩ
Dielectric Resistance		1000V
Applicable Wire Size		0.2mm² ~2.0mm² (22 AWG~14 AWG)
Maximum Electric Current		13A

090 KST JOINT SERIES

UNSEALED

TERMINAL

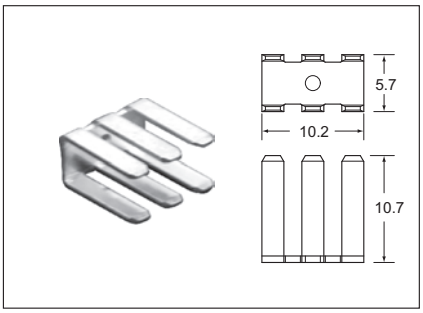

ITEM NO.	WIRE RANGE		MATERIAL	PLATINGS	Q'TY	APPLICATOR	DIES
	A.W.G.	mm²			REEL		
1101A0544L	-	-	Brass	Pre-Tin	500	-	-

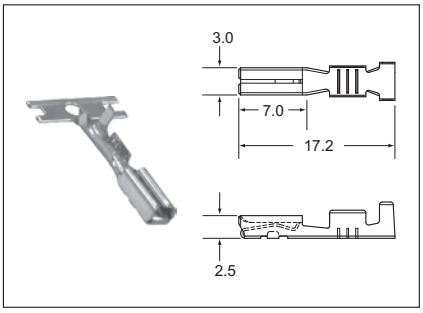

ITEM NO.	WIRE RANGE		MATERIAL	PLATINGS	Q'TY	APPLICATOR	DIES
	A.W.G.	mm²			REEL		
1201A0000	22-20	0.3-0.5	Brass	Pre-Tin	5000	CDM-94115-S	CDT-94115-S
1201A0001	18-16	0.85-1.25	Brass	Pre-Tin	5000	CDM-94115-M	CDT-94115-M
1201A0002	14	2.0	Brass	Pre-Tin	5000	CDM-94115-L	CDT-94115-L
1211A0002	14	2.0	Copper Alloy	Pre-Tin	5000	CDM-94115-L	CDT-94115-L
1201A0004	18-16	0.75-1.25	Brass	Pre-Tin	5000	CDM-94115-J	CDT-94115-J

HOUSING:A TYPE

POLE	FEMALE	LOCK
6	**3206A0547**  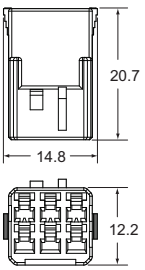 **100 PCS**	**3706A0542**  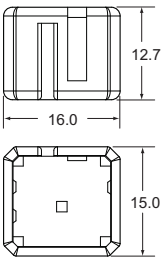 **500 PCS**

- HOUSING (UNIT:mm)
  MATERIAL:HOUSING:NY66
  LOCK:PP
  COLOR:HOUSING:GREEN
  LOCK:BLACK

090 SMTO
DL SERIES
SEALED

CONSTRUCTION

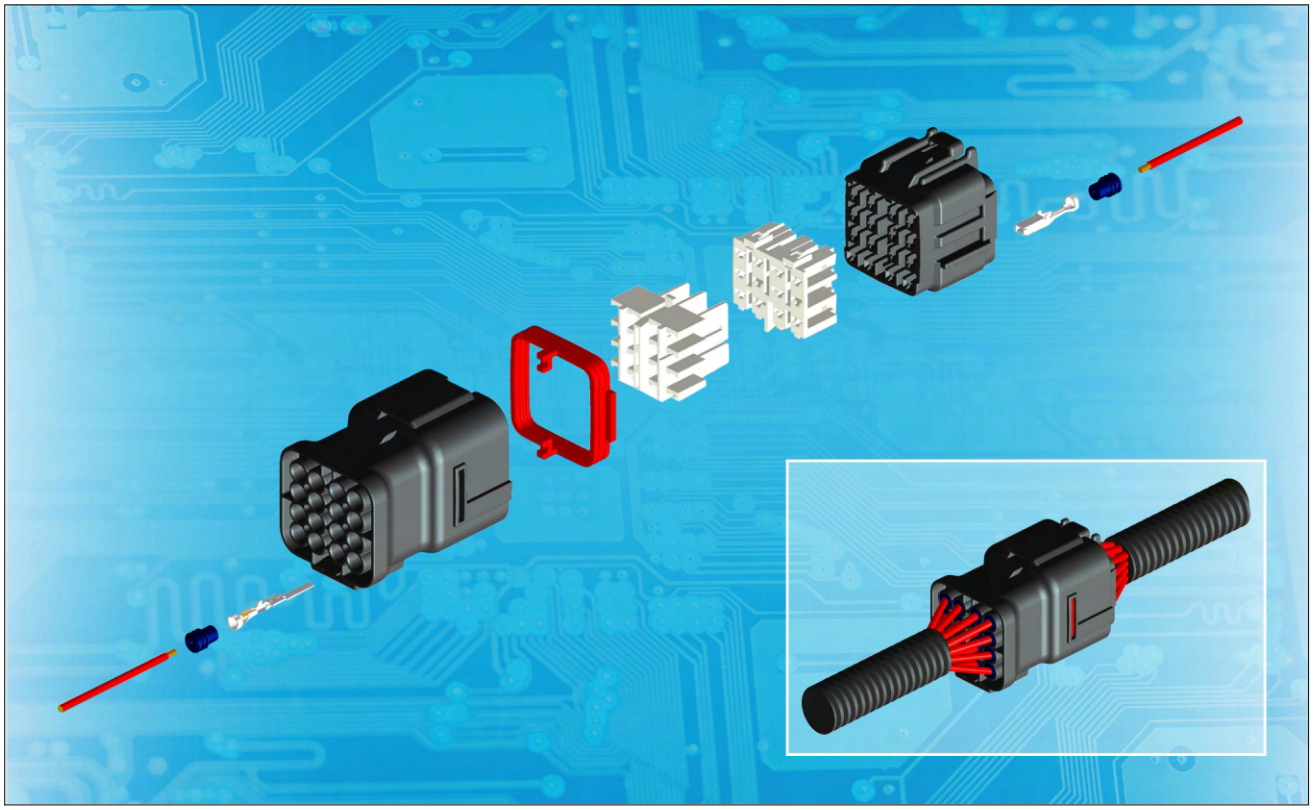

SPECIFICATIONS

Material	Connector	PBT
	Male Terminal	BRASS
	Female Terminal	COPPER ALLOY
Operating Temperature Range		-40°C~+120°C
Voltage Drop		3mV/A
Isolation Resistance		100MΩ
Dielectric Resistance		1000V
Applicable Wire Size		0.3mm² ~2.0mm² (22 AWG~14 AWG)
Maximum Electric Current		10A

090 SMTO
DL SERIES
SEALED

TERMINAL

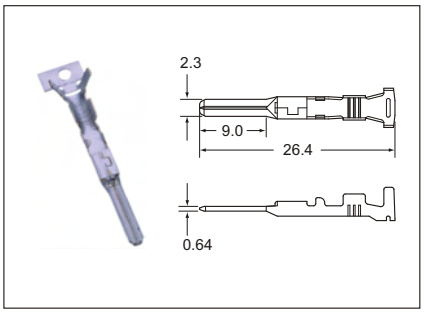

ITEM NO.	WIRE RANGE A.W.G.	WIRE RANGE mm^2	MATERIAL	PLATINGS	Q'TY REEL	APPLICATOR	DIES
1101A0050	22-20	0.3-0.5	Brass	Pre-Tin	4000	CDM-94107-S	CDT-94107-S
1101A0051	18-16	0.75-1.25	Brass	Pre-Tin	3500	CDM-94107-M	CDT-94107-M
1101A0052	14-12	1.25-2.0	Brass	Pre-Tin	3500	CDM-94107-L	CDT-94107-L

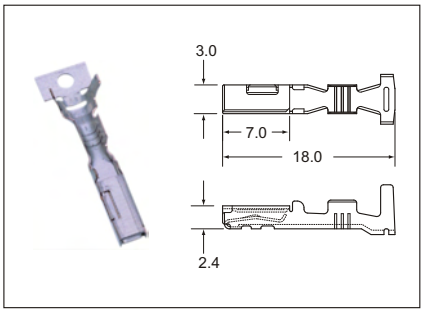

ITEM NO.	WIRE RANGE A.W.G.	WIRE RANGE mm^2	MATERIAL	PLATINGS	Q'TY REEL	APPLICATOR	DIES
1211A0060	22-20	0.3-0.5	Copper Alloy	Pre-Tin	4000	CDM-94109-S	CDT-94109-S
1211A0061	18-16	0.75-1.25	Copper Alloy	Pre-Tin	3500	CDM-94109-M	CDT-94109-M
1211A0062	16-14	1.25-2.0	Copper Alloy	Pre-Tin	3500	CDM-94109-L	CDT-94109-L

HOUSING

POLE	MALE	FEMALE
2	**3102A0639**  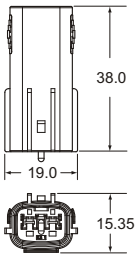 **100 PCS**	**3202A0639**  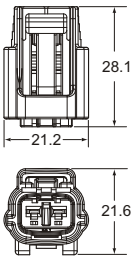 **100 PCS**
4	**3104A0639**  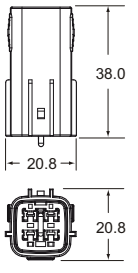 **100 PCS**	**3204A0639**  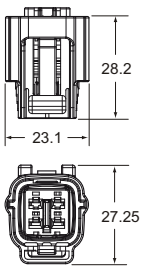 **100 PCS**

• HOUSING (UNIT:mm)
MATERIAL:PBT
COLOR:GREY

090 SMTO
DL SERIES
SEALED

HOUSING

POLE	MALE	FEMALE
6	**3106A0639**  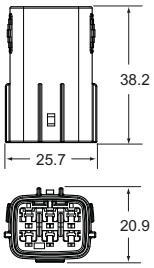 **50 PCS**	**3206A0639**  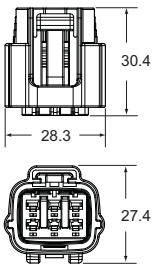 **50 PCS**
12	**3112A0639**  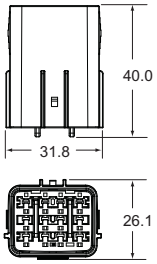 **25 PCS**	**3212A0639**  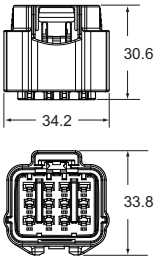 **50 PCS**
16	**3116A0639**  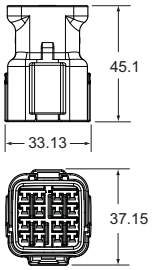 **25 PCS**	**3216A0639**  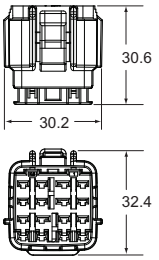 **50 PCS**

- HOUSING (UNIT:mm)
  MATERIAL:PBT
  COLOR:GREY

090 SMTO
DL SERIES
SEALED

RUBBER SEAL

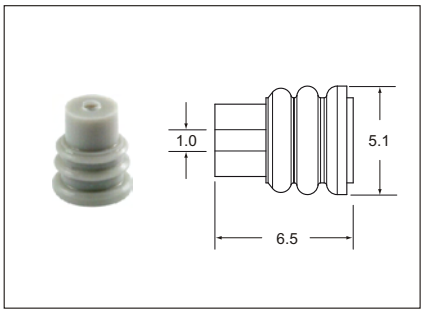

ITEM NO.	MATERIAL	COLOR	Q'TY BAG	WIRE INSULATION DIAMETER(mm)
7001A0639	SILICONE	GREY	1000	1.2-1.7

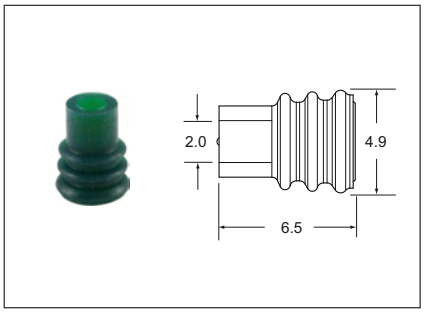

ITEM NO.	MATERIAL	COLOR	Q'TY BAG	WIRE INSULATION DIAMETER(mm)
7001A0647	SILICONE	GREEN	1000	1.5-2.0

090 FRKW
FW SERIES
SEALED

CONSTRUCTION

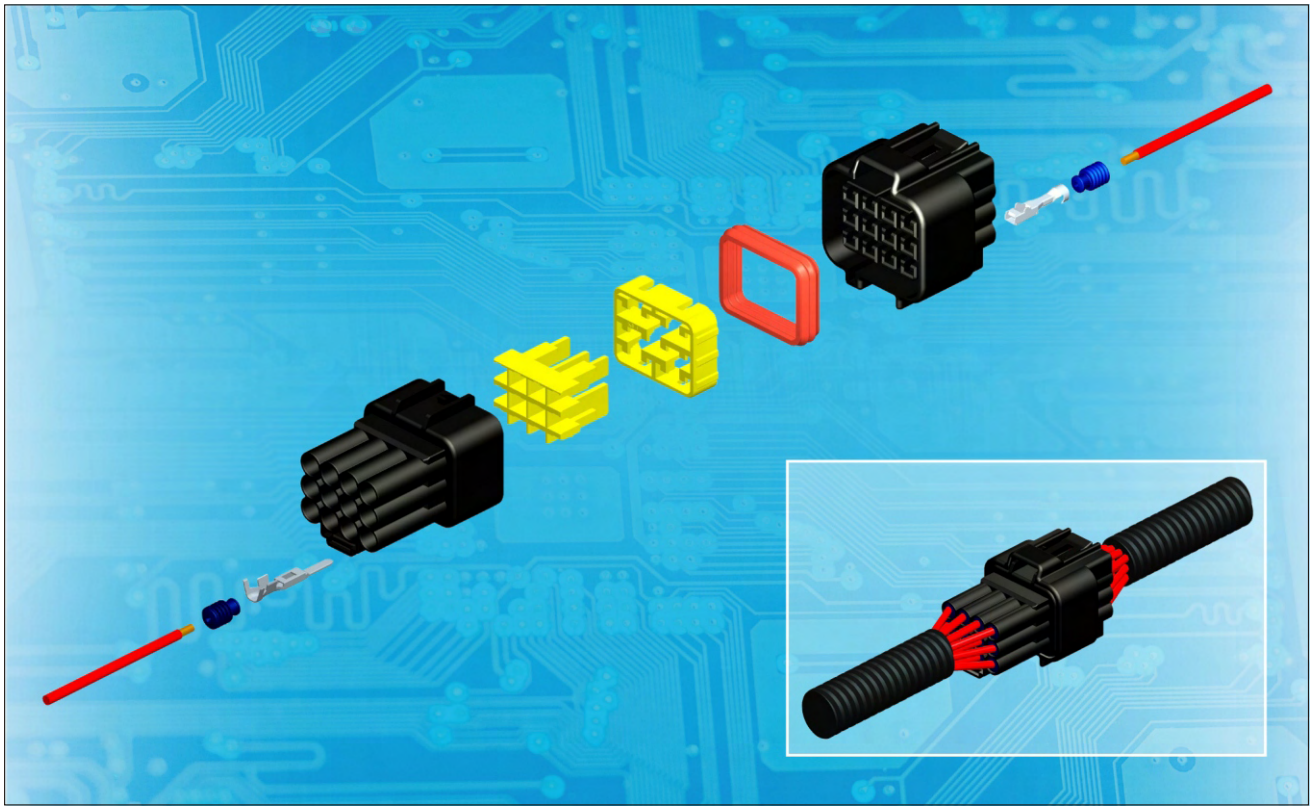

SPECIFICATIONS

Material	Connector	PBT
	Male Terminal	BRASS
	Female Terminal	BRASS
Operating Temperature Range		-40°C~+120°C
Voltage Drop		5mV/A
Isolation Resistance		100MΩ
Dielectric Resistance		1000V
Applicable Wire Size		0.3mm² ~2.0mm² (22 AWG~14 AWG)
Maximum Electric Current		10A

090 FRKW
FW SERIES
SEALED

TERMINAL

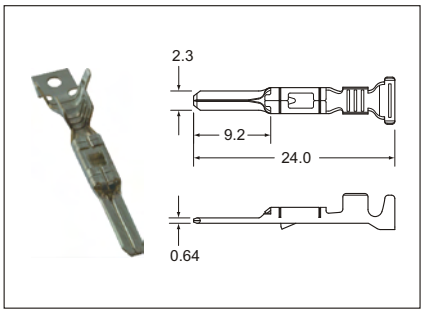

ITEM NO.	WIRE RANGE		MATERIAL	PLATINGS	Q'TY REEL	APPLICATOR	DIES
	A.W.G.	mm^2					
1101A0200	22	0.3	Brass	Pre-Tin	5000	CDM-96011-S	CDT-96011-S
1101A0201	20-18	0.5-0.85	Brass	Pre-Tin	3000	CDM-96011-M	CDT-96011-M
1101A0202	16-14	1.25-2.0	Brass	Pre-Tin	3000	CDM-96011-L	CDT-96011-L

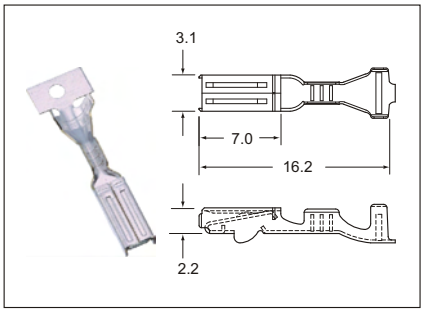

ITEM NO.	WIRE RANGE		MATERIAL	PLATINGS	Q'TY REEL	APPLICATOR	DIES
	A.W.G.	mm^2					
1201A0080	22	0.3	Brass	Pre-Tin	5000	CDM-94013-S	CDT-94013-S
1201A0081	20-18	0.5-0.85	Brass	Pre-Tin	4000	CDM-94013-M	CDT-94013-M
1201A0082	16-14	1.25-2.0	Brass	Pre-Tin	3000	CDM-94013-L	CDT-94013-L

RUBBER SEAL

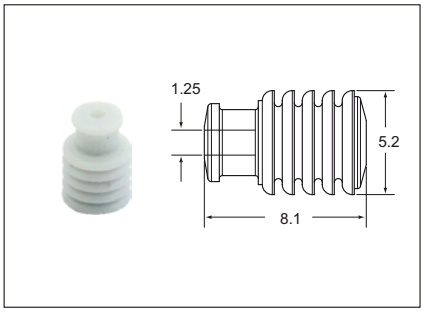

ITEM NO.	MATERIAL	COLOR	Q'TY BAG	WIRE INSULATION DIAMETER(mm)
7001A0206	SILICONE	BLUE	1000	1.4-2.0

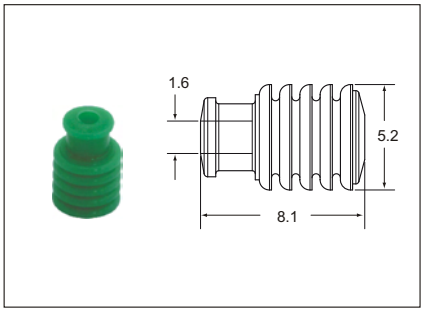

ITEM NO.	MATERIAL	COLOR	Q'TY BAG	WIRE INSULATION DIAMETER(mm)
7001A0217	SILICONE	GREEN	1000	2.0-2.5

090 FRKW
FW SERIES
SEALED

RUBBER SEAL

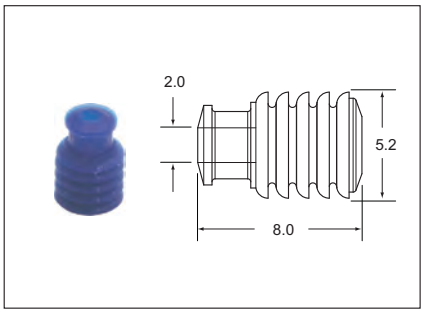

ITEM NO.	MATERIAL	COLOR	Q'TY BAG	WIRE INSULATION DIAMETER(mm)
7001A0229	SILICONE	GREY	1000	2.5-2.8

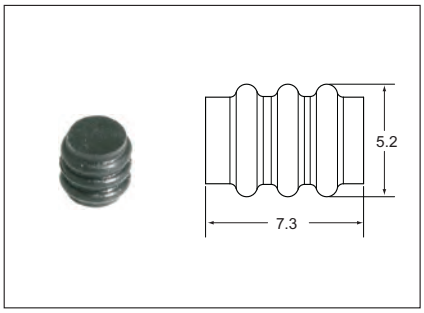

ITEM NO.	MATERIAL	COLOR	Q'TY BAG	REMARKS
7000A0208	SILICONE	VIOLET	1000	

HOUSING

POLE	MALE	LOCK	FEMALE	LOCK
2		**3602A0203** 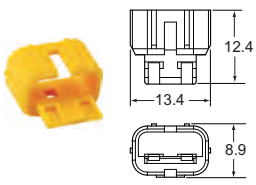 **100 PCS**		
3	**3103A0202** 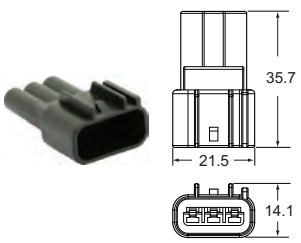 **100 PCS**	**3603A0203** 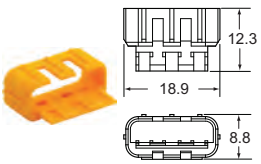 **100 PCS**	**3203A0204** 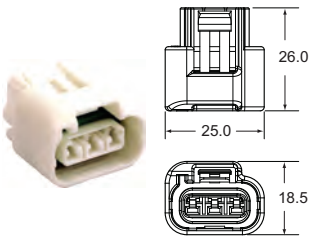 **50 PCS**	**3703A0203** 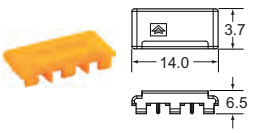 **100 PCS**

• HOUSING (UNIT:mm)
MATERIAL:PBT
COLOR:3103A0202:BLACK
3203A0204:WHITE
LOCK:YELLOW

090 FRKW
FW SERIES
SEALED

HOUSING

POLE	MALE	LOCK	FEMALE	LOCK
6	3106A0202 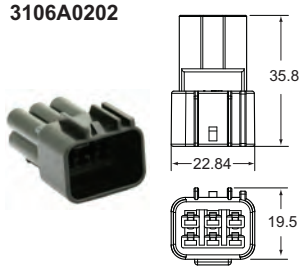 100 PCS	3606A0203 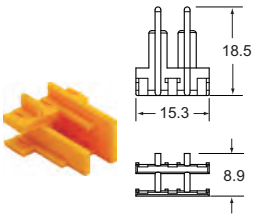 100 PCS	3206A0202 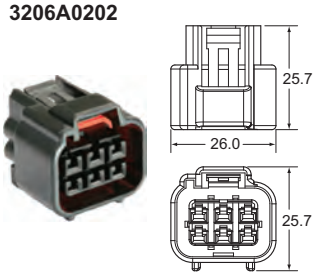 100 PCS	3706A0203 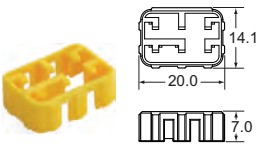 100 PCS
8	3108A0202 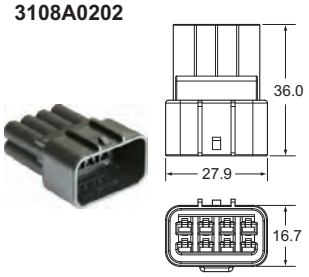 100 PCS	3608A0203 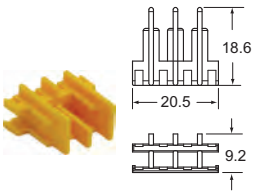 100 PCS	3208A0202 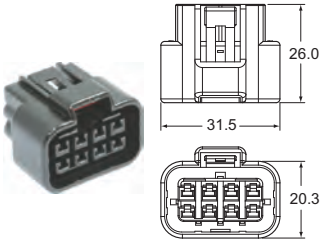 100 PCS	3708A0203 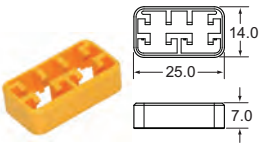 100 PCS
9	3109A0202 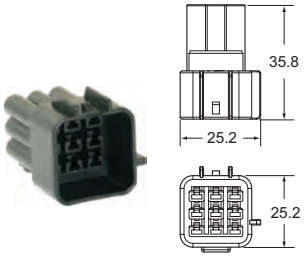 100 PCS	3609A0203 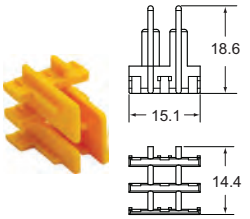 100 PCS	3209A0202 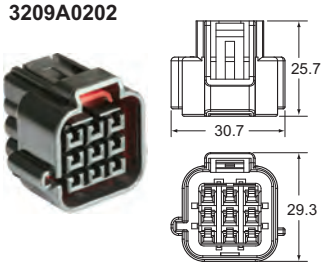 100 PCS	3709A0203 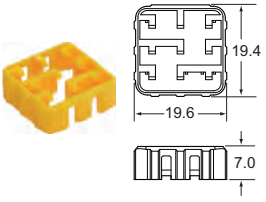 100 PCS
12	3112A0202 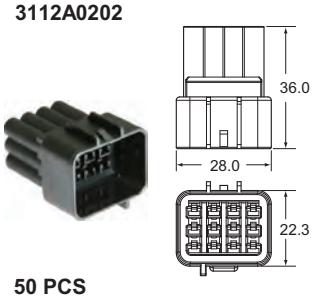 50 PCS	3612A0203 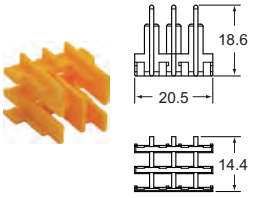 100 PCS	3212A0202 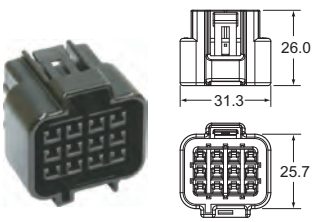 50 PCS	3712A0203 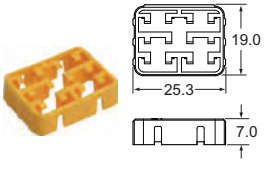 100 PCS

• HOUSING (UNIT:mm)
MATERIAL:PBT
COLOR:HOUSING:BLACK
LOCK:YELLOW

090 FRKW
FW SERIES
SEALED

HOUSING

POLE	MALE	LOCK	FEMALE	LOCK
16			3216A0204 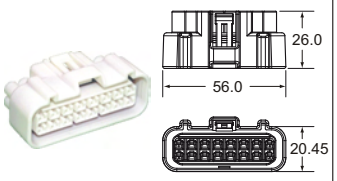 100 PCS	3716A0203 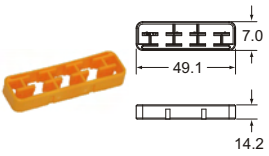 100 PCS

• HOUSING (UNIT:mm)
MATERIAL:PBT
COLOR:HOUSING:WHITE
LOCK:YELLOW

090 SMTO
FUEL PUMP SERIES
SEALED

SPECIFICATIONS

Material	Connector	PBT
	Male Terminal	-
	Female Terminal	COPPER ALLOY
Operating Temperature Range		-40°C~+120°C
Voltage Drop		3mV/A
Isolation Resistance		100MΩ
Dielectric Resistance		1000V
Applicable Wire Size		0.3mm^2 ~2.0mm^2 (22 AWG~14 AWG)
Maximum Electric Current		15A

090 SMTO
FUEL PUMP SERIES
SEALED

TERMINAL

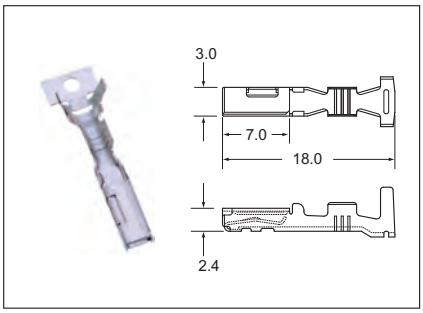

ITEM NO.	WIRE RANGE		MATERIAL	PLATINGS	Q'TY	APPLICATOR	DIES
	A.W.G.	mm^2			REEL		
1211A0060	22-20	0.3	Copper Alloy	Pre-Tin	4000	CDM-94109-S	CDT-94109-S
1211A0061	18-16	0.75-1.25	Copper Alloy	Pre-Tin	3500	CDM-94109-M	CDT-94109-M
1211A0062	16-14	1.25-2.0	Copper Alloy	Pre-Tin	3500	CDM-94109-L	CDT-94109-L

HOUSING

POLE		FEMALE
4		**3204A0442** 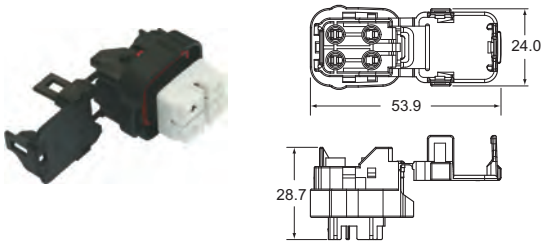 **50 PCS**

- HOUSING (UNIT:mm)
  MATERIAL:PBT
  COLOR:BLACK

090 RS
NMWP SERIES
SEALED

SPECIFICATIONS

Material	Connector	PBT
	Male Terminal	PHOSPHOR BRONZE
	Female Terminal	COPPER ALLOY
Operating Temperature Range		-40°C~+120°C
Voltage Drop		5mV/A
Isolation Resistance		100MΩ
Dielectric Resistance		1000V
Applicable Wire Size		0.3mm^2 ~1.25mm^2 (22 AWG~16 AWG)
Maximum Electric Current		9A

090 RS
NMWP SERIES
SEALED

TERMINAL

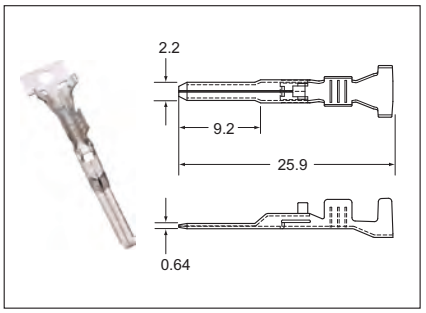

ITEM NO.	WIRE RANGE		MATERIAL	PLATINGS	Q'TY	APPLICATOR	DIES
	A.W.G.	mm²			REEL		
1121A0081	18-16	0.85-1.25	Phosphor Bronze	Pre-Tin	3000	CDM-95010-M	CDT-95010-M

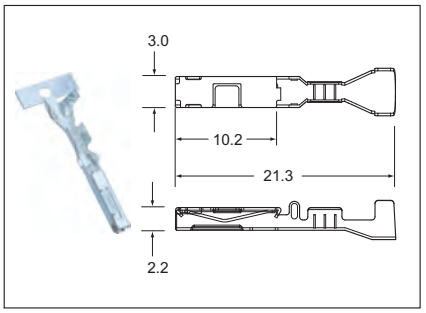

ITEM NO.	WIRE RANGE		MATERIAL	PLATINGS	Q'TY	APPLICATOR	DIES
	A.W.G.	mm²			REEL		
1211A0205	22-20	0.3-0.5	Copper Alloy	Pre-Tin	3500	CDM-96026-S	CDT-96026-S

HOUSING

POLE	MALE	FEMALE
10	**3210A0532**  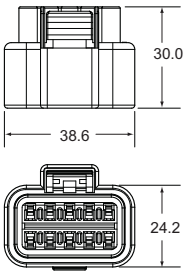 **25 PCS**	**3710A0537**  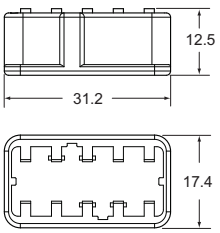 **100 PCS**

- HOUSING (UNIT:mm)
  MATERIAL:PBT
  COLOR:HOUSING:BLACK
  LOCK:GREEN

090 CONNECTOR
UNSEALED

SPECIFICATIONS

Material	Connector	NY66
	Male Terminal	-
	Female Terminal	BRASS
Operating Temperature Range		-40°C~+120°C
Voltage Drop		5mV/A
Isolation Resistance		100MΩ
Dielectric Resistance		1000V
Applicable Wire Size		$0.3mm^2$ ~$0.5mm^2$ (22 AWG~20 AWG)
Maximum Electric Current		8A

090 CONNECTOR
UNSEALED

TERMINAL

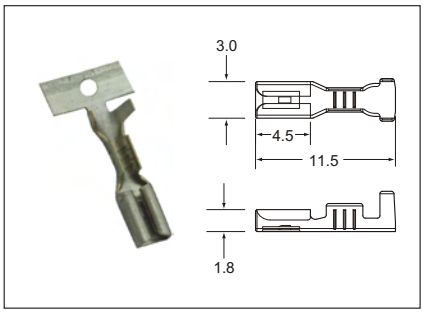

ITEM NO.	WIRE RANGE		MATERIAL	PLATINGS	Q'TY	APPLICATOR	DIES
	A.W.G.	mm^2			REEL		
1201A0720	22-20	0.3-0.5	Brass	Pre-Tin	5500	CDM-97016-S	CDT-97016-S

HOUSING

POLE		FEMALE
3		**3203A0721**  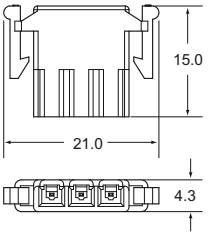 **100 PCS**

- HOUSING (UNIT:mm)
  MATERIAL:NY66
  COLOR:NATURAL

090 YK
2.3II (090II)
SEALED

SPECIFICATIONS

Material	Connector	PBT
	Male Terminal	-
	Female Terminal	BRASS OR COPPER ALLOY
Operating Temperature Range		-40°C~+120°C
Voltage Drop		3mV/A
Isolation Resistance		100MΩ
Dielectric Resistance		1000V
Applicable Wire Size		0.3mm^2 ~1.25mm^2 (22 AWG~16 AWG)
Maximum Electric Current		13A

090 YK
2.3II (090II)
SEALED

TERMINAL

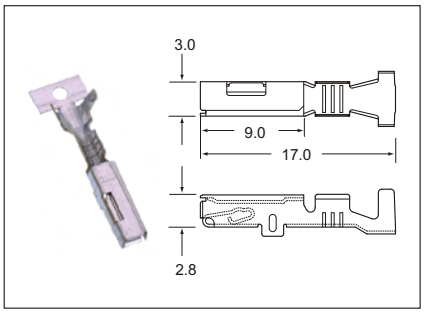

ITEM NO.	WIRE RANGE		MATERIAL	PLATINGS	Q'TY	APPLICATOR	DIES
	A.W.G.	mm^2			REEL		
1201A0015	22-20	0.3-0.5	Brass	Pre-Tin	4000	CDM-93109-S	CDT-93109-S
1201A0016	18-16	0.85-1.25	Brass	Pre-Tin	4000	CDM-93109-M	CDT-93109-M
1211A0015	22-20	0.3-0.5	Copper Alloy	Pre-Tin	4000	CDM-93109-S	CDT-93109-S
1211A0016	18-16	0.85-1.25	Copper Alloy	Pre-Tin	4000	CDM-93109-M	CDT-93109-M

HOUSING

POLE		FEMALE
2		**3202A0512**  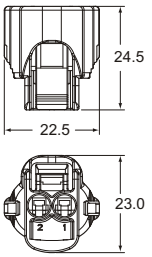 **100 PCS**

• HOUSING (UNIT:mm)
MATERIAL:PBT
COLOR:BLACK

090 KST
B TYPE SERIES
UNSEALED

SPECIFICATIONS

Material	Connector	-
	Male Terminal	BRASS
	Female Terminal	-
Operating Temperature Range		-40°C~+120°C
Voltage Drop		3mV/A
Isolation Resistance		-
Dielectric Resistance		-
Applicable Wire Size		0.3mm^2 ~2.0mm^2 (22 AWG~14 AWG)
Maximum Electric Current		25A

090 KST
B TYPE SERIES
UNSEALED

TERMINAL

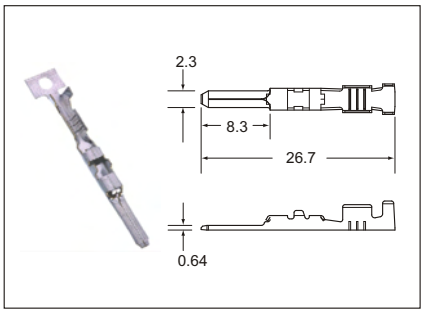

ITEM NO.	WIRE RANGE		MATERIAL	PLATINGS	Q'TY	APPLICATOR	DIES
	A.W.G.	mm^2			REEL		
1101A0000	22-20	0.3-0.5	Brass	Pre-Tin	5000	CDM-94116-S	CDT-94116-S
1101A0001	18-16	0.85-1.25	Brass	Pre-Tin	5000	CDM-94116-M	CDT-94116-M
1101A0002	14	2.0	Brass	Pre-Tin	5000	CDM-94116-L	CDT-94116-L

090 SMTO
TS、DL、SL SERIES
UNSEALED

SPECIFICATIONS

Material	Connector	-
	Male Terminal	BRASS
	Female Terminal	BRASS OR COPPER ALLOY
Operating Temperature Range		-40°C~+120°C
Voltage Drop		3mV/A
Isolation Resistance		-
Dielectric Resistance		-
Applicable Wire Size		0.3mm^2 ~2.0mm^2 (22 AWG~14 AWG)
Maximum Electric Current		25A

090 SMTO
TS、DL、SL SERIES
UNSEALED

TERMINAL

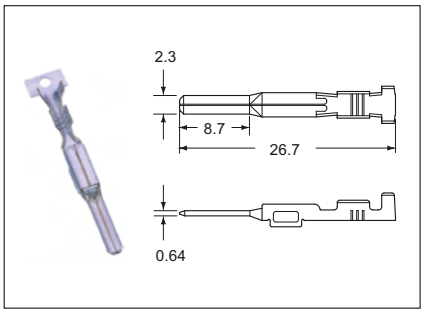

ITEM NO.	WIRE RANGE		MATERIAL	PLATINGS	Q'TY REEL	APPLICATOR	DIES
	A.W.G.	mm^2					
1101A0010	22-20	0.3-0.5	Brass	Pre-Tin	5000	CDM-94120-S	CDT-94120-S
1101A0011	20-16	0.5-1.25	Brass	Pre-Tin	5000	CDM-94120-M	CDT-94120-M
1101A0012	14	2.0	Brass	Pre-Tin	5000	CDM-94120-L	CDT-94120-L

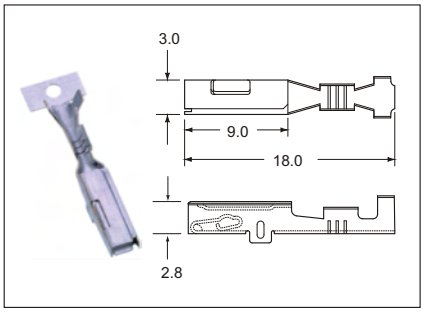

ITEM NO.	WIRE RANGE		MATERIAL	PLATINGS	Q'TY REEL	APPLICATOR	DIES
	A.W.G.	mm^2					
1201A0010	22-20	0.3-0.5	Brass	Pre-Tin	5000	CDM-94119-S	CDT-94119-S
1201A0011	20-16	0.5-1.25	Brass	Pre-Tin	4000	CDM-94119-M	CDT-94119-M
1201A0012	14	2.0	Brass	Pre-Tin	4000	CDM-94119-L	CDT-94119-L
1211A0012	14	2.0	Copper Alloy	Pre-Tin	4000	CDM-94119-L	CDT-94119-L

090 SMTO
TS SERIES
SEALED

SPECIFICATIONS

Material	Connector	-
	Male Terminal	BRASS
	Female Terminal	BRASS OR COPPER ALLOY
Operating Temperature Range		-40°C~+120°C
Voltage Drop		3mV/A
Isolation Resistance		-
Dielectric Resistance		-
Applicable Wire Size		0.3mm^2 ~1.25mm^2 (22 AWG~16 AWG)
Maximum Electric Current		18A

090 SMTO
TS SERIES
SEALED

TERMINAL

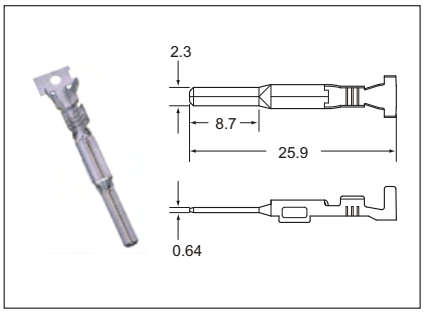

ITEM NO.	WIRE RANGE		MATERIAL	PLATINGS	Q'TY REEL	APPLICATOR	DIES
	A.W.G.	mm^2					
1101A0015	22-20	0.3-0.5	Brass	Pre-Tin	4000	CDM-94121-S	CDT-94121-S
1101A0016	20-16	0.5-1.25	Brass	Pre-Tin	4000	CDM-94121-M	CDT-94121-M

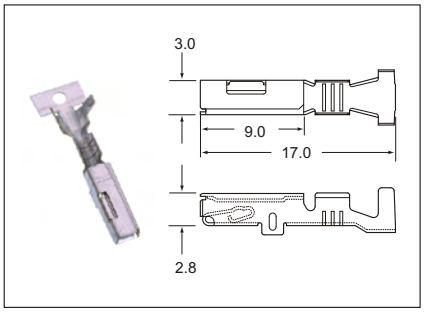

ITEM NO.	WIRE RANGE		MATERIAL	PLATINGS	Q'TY REEL	APPLICATOR	DIES
	A.W.G.	mm^2					
1201A0015	22-20	0.3-0.5	Brass	Pre-Tin	4000	CDM-93109-S	CDT-93109-S
1201A0016	18-16	0.85-1.25	Brass	Pre-Tin	4000	CDM-93109-M	CDT-93109-M
1211A0015	22-20	0.3-0.5	Copper Alloy	Pre-Tin	4000	CDM-93109-S	CDT-93109-S
1211A0016	18-16	0.85-1.25	Copper Alloy	Pre-Tin	4000	CDM-93109-M	CDT-93109-M

090 SMTO
91RS SERIES
SEALED

SPECIFICATIONS

Material	Connector	-
	Male Terminal	PHOSPHOR BRONZE
	Female Terminal	COPPER ALLOY
Operating Temperature Range		-40°C~+120°C
Voltage Drop		3mV/A
Isolation Resistance		-
Dielectric Resistance		-
Applicable Wire Size		0.3mm^2 ~1.25mm^2 (22 AWG~16 AWG)
Maximum Electric Current		18A

090 SMTO
91RS SERIES
SEALED

TERMINAL

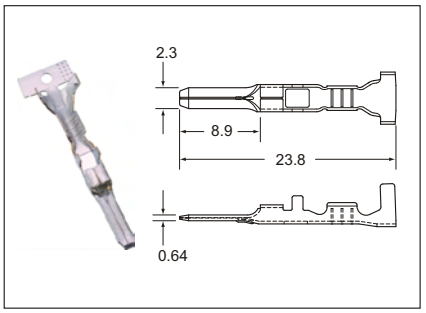

ITEM NO.	WIRE RANGE		MATERIAL	PLATINGS	Q'TY	APPLICATOR	DIES
	A.W.G.	mm^2			REEL		
1121A0075	22-20	0.3-0.5	Phosphor Bronze	Pre-Tin	3000	CDM-95003-S	CDT-95003-S
1121A0076	18-16	0.85-1.25	Phosphor Bronze	Pre-Tin	3000	CDM-95003-M	CDT-95003-M

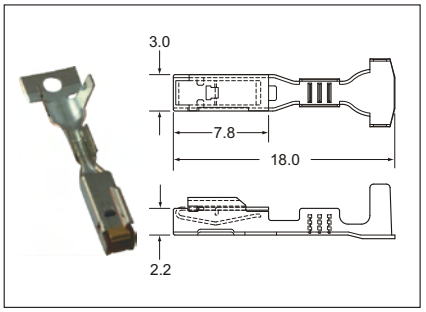

ITEM NO.	WIRE RANGE		MATERIAL	PLATINGS	Q'TY	APPLICATOR	DIES
	A.W.G.	mm^2			REEL		
1210A0230	22-20	0.3-0.5	Copper Alloy	None	3000	CDM-96014-S	CDT-96014-S
1211A0230	22-20	0.3-0.5	Copper Alloy	Pre-Tin	3000	CDM-96014-S	CDT-96014-S
1213A0230	22-20	0.3-0.5	Copper Alloy	Nickel-gold	3000	CDM-96014-S	CDT-96014-S
1216A0230	22-20	0.3-0.5	Copper Alloy	Pre-Nickel-gold	3000	CDM-96014-S	CDT-96014-S

090 TYPE
SEALED

SPECIFICATIONS

Material	Connector	-
	Male Terminal	-
	Female Terminal	BRASS
Operating Temperature Range		-40°C~+120°C
Voltage Drop		3mV/A
Isolation Resistance		-
Dielectric Resistance		-
Applicable Wire Size		0.3mm^2 ~2.0mm^2 (22 AWG~14 AWG)
Maximum Electric Current		25A

090 TYPE
SEALED

TERMINAL

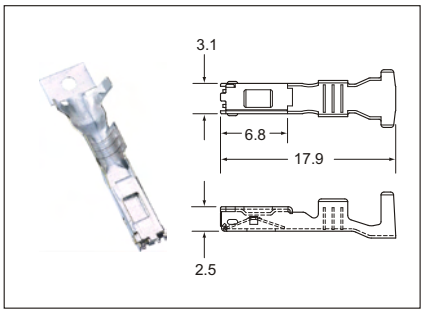

ITEM NO.	WIRE RANGE		MATERIAL	PLATINGS	Q'TY	APPLICATOR	DIES
	A.W.G.	mm^2			REEL		
1201A0110	20	0.5	Brass	Pre-Tin	3000	CDM-95019-S	CDT-95019-S
1201A0112	16-14	1.25-2.0	Brass	Pre-Tin	3000	CDM-95019-M	CDT-95019-M

110 SERIES AUTOMOTIVE CONNECTORS



110 ML SERIES
UNSEALED

SPECIFICATIONS

Material	Connector	NY66
	Male Terminal	BRASS
	Female Terminal	BRASS
Operating Temperature Range		-40°C~+120°C
Voltage Drop		5mV/A
Isolation Resistance		100MΩ
Dielectric Resistance		1000V
Applicable Wire Size		0.3mm^2 ~3.0mm^2 (22 AWG~12 AWG)
Maximum Electric Current		18A

110 ML SERIES
UNSEALED

TERMINAL

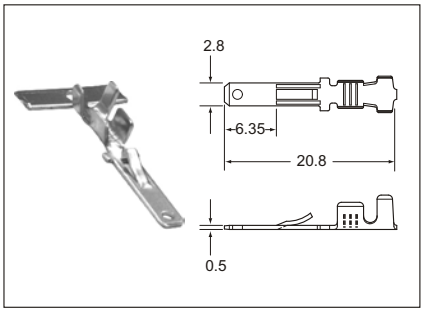

ITEM NO.	WIRE RANGE		MATERIAL	PLATINGS	Q'TY	APPLICATOR	DIES
	A.W.G.	mm²			REEL		
MS110-01B2	22-20	0.3-0.5	Brass	Tin	5000	CDM-93036-S	CDT-93036-S
MS110-01B9	22-20	0.3-0.5	Brass	None	5000	CDM-93036-S	CDT-93036-S
◎MM110-01B2	18-16	0.85-1.25	Brass	Tin	5000	CDM-93036-M	CDT-93036-M
◎MM110-01B9	18-16	0.85-1.25	Brass	None	5000	CDM-93036-M	CDT-93036-M
ML110-01B2	14	2.0	Brass	Tin	2000	CDM-93036-L	CDT-93036-L
ML110-01B9	14	2.0	Brass	None	2000	CDM-93036-L	CDT-93036-L

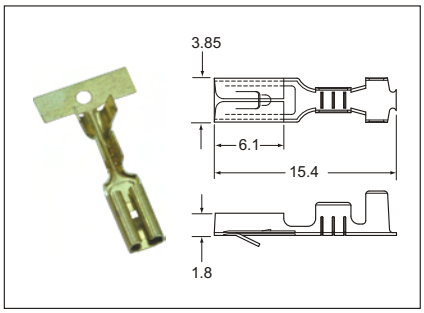

ITEM NO.	WIRE RANGE		MATERIAL	PLATINGS	Q'TY	APPLICATOR	DIES
	A.W.G.	mm²			REEL		
FS110-06B95	22-20	0.3-0.5	Brass	None	5000	CDM-97008-S	CDT-97008-S
FS110-06BT5	22-20	0.3-0.5	Brass	Pre-Tin	5000	CDM-97008-S	CDT-97008-S
FM110-06B95	18-16	0.85-1.25	Brass	None	4000	CDM-97008-M	CDT-97008-M
FM110-06BT5	18-16	0.85-1.25	Brass	Pre-Tin	4000	CDM-97008-M	CDT-97008-M
FL110-06B95	14	2.0	Brass	None	4000	CDM-97008-L	CDT-97008-L
FL110-06BT5	14	2.0	Brass	Pre-Tin	4000	CDM-97008-L	CDT-97008-L

(UL) c(UL) ALL LISTED
◎: NOT UL AND C-UL LISTED

HOUSING

POLE	MALE	FEMALE
2	**3102A0741**  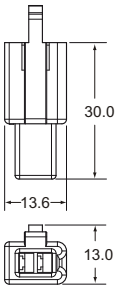 **100 PCS**	**3202A0741**  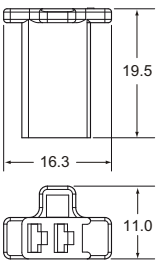 **100 PCS**

• HOUSING (UNIT:mm)
MATERIAL:NY66
COLOR:NATURAL

110 ML SERIES
UNSEALED

HOUSING

POLE	MALE	FEMALE
3	**3103A0741**  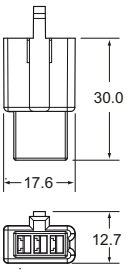 **100 PCS**	**3203A0741**  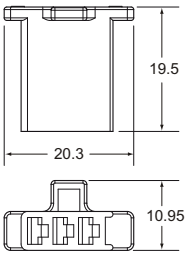 **100 PCS**
4	**3104A0741** 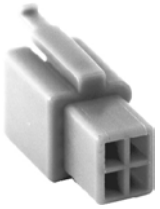 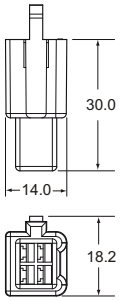 **100 PCS**	**3204A0741**  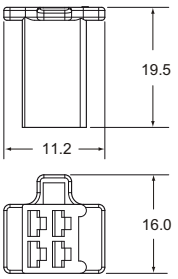 **100 PCS**
6	**3106A0741**  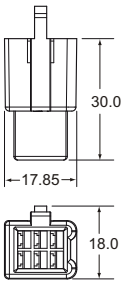 **100 PCS**	**3206A0741**  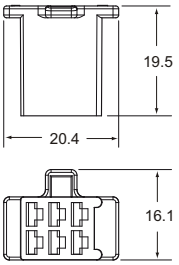 **100 PCS**

• HOUSING (UNIT:mm)
MATERIAL:NY66
COLOR:NATURAL

110 AM
JUNIOR TIMER CANTACT
SEALED

SPECIFICATIONS

Material	Connector	NY66
	Male Terminal	PHOSPHOR BRONZE
	Female Terminal	PHOSPHOR BRONZE
Operating Temperature Range		-40°C~+130°C
Voltage Drop		3mV/A
Isolation Resistance		100MΩ
Dielectric Resistance		1500V
Applicable Wire Size		0.5mm^2 ~2.0mm^2 (20 AWG~14 AWG)
Maximum Electric Current		7A

110 AM
JUNIOR TIMER CANTACT
SEALED

TERMINAL

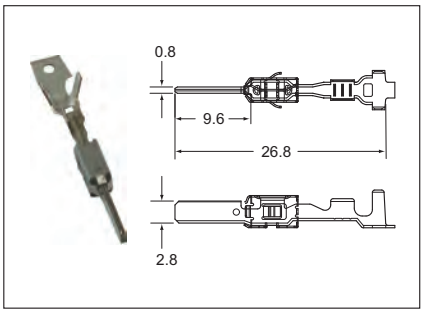

ITEM NO.	WIRE RANGE		MATERIAL	PLATINGS	Q'TY	APPLICATOR	DIES
	A.W.G.	mm²			REEL		
1121A0341	20-18	0.5-1.0	Phosphor Bronze	Pre-Tin	2500	CDM-96010-M	CDT-96010-M
1121A0342	18-14	1.0-2.5	Phosphor Bronze	Pre-Tin	2500	CDM-96010-L	CDT-96010-L

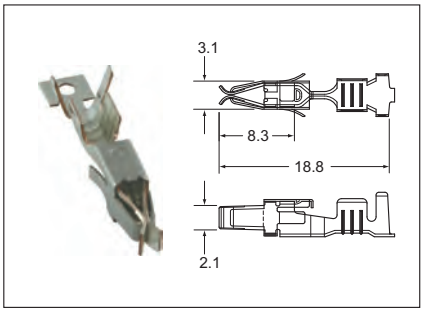

ITEM NO.	WIRE RANGE		MATERIAL	PLATINGS	Q'TY	APPLICATOR	DIES
	A.W.G.	mm²			REEL		
1221A0340	24-22	0.2-0.3	Phosphor Bronze	Pre-Tin	3000	CDM-95038-S	CDT-95038-S
1221A0341	20-18	0.5-1.0	Phosphor Bronze	Pre-Tin	3000	CDM-95038-M	CDT-95038-M
1221A0342	18-14	1.0-2.5	Phosphor Bronze	Pre-Tin	3000	CDM-95038-L	CDT-95038-L

HOUSING

POLE		FEMALE
25		**3225A0342** 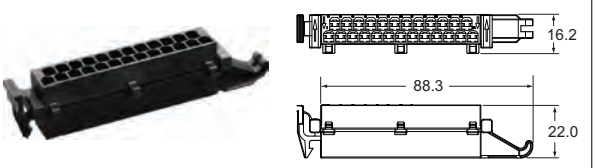 **25 PCS**

• HOUSING (UNIT:mm)
MATERIAL:NY66
COLOR:BLACK

110 DF
GT 280 SERIES
SEALED

SPECIFICATIONS

Material	Connector	NY66
	Male Terminal	-
	Female Terminal	-
Operating Temperature Range		-40˚C~+125˚C
Voltage Drop		-
Isolation Resistance		100MΩ
Dielectric Resistance		1000V
Applicable Wire Size		-
Maximum Electric Current		-

110 DF
GT 280 SERIES
SEALED

HOUSING

POLE	FEMALE	LOCK
4	**3204A0412**  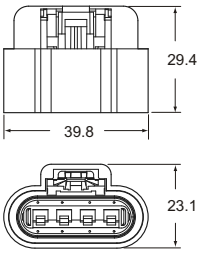 **50 PCS**	**3704A0419**  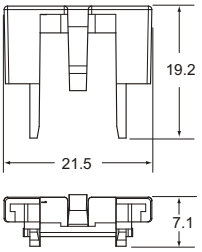 **100 PCS**

- HOUSING (UNIT:mm)
  MATERIAL:NY66
  COLOR:HOUSING:BLACK
  LOCK:GREY

110 AM
JUNIOR TIMER CANTACT
SEALED

SPECIFICATIONS

Material	Connector	PBT
	Male Terminal	-
	Female Terminal	-
Operating Temperature Range		-40°C~+130°C
Voltage Drop		-
Isolation Resistance		100MΩ
Dielectric Resistance		1500V
Applicable Wire Size		-
Maximum Electric Current		-

110 AM
JUNIOR TIMER CANTACT
SEALED

HOUSING

POLE		FEMALE
4		**3204A0772**  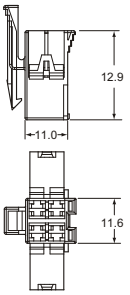 **100 PCS**
6		**3206A0772**  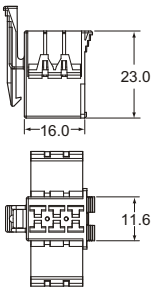 **50 PCS**
10		**3210A0772**  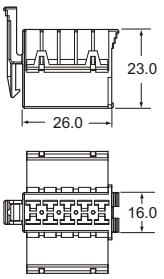 **50 PCS**
14		**3214A0772** 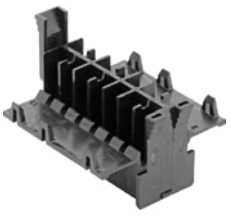 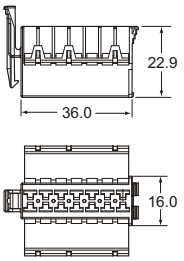 **50 PCS**

• HOUSING (UNIT:mm)
MATERIAL:PBT
COLOR:BLACK

110 SERIES TERMINALS

SPECIFICATIONS

Material	Connector	-
	Male Terminal	BRASS
	Female Terminal	BRASS OR COPPER ALLOY
Operating Temperature Range		-40°C~+125°C
Voltage Drop		5mV/A
Isolation Resistance		-
Dielectric Resistance		-
Applicable Wire Size		0.3mm^2 ~2.0mm^2 (22 AWG~14 AWG)
Maximum Electric Current		25A

110 SERIES TERMINALS

TERMINAL

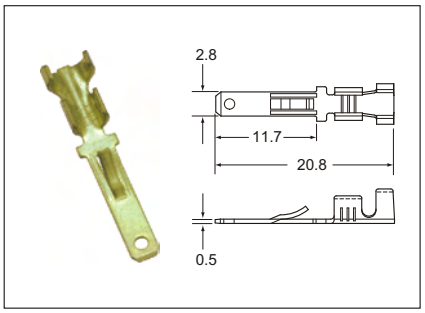

ITEM NO.	WIRE RANGE A.W.G.	WIRE RANGE mm²	MATERIAL	PLATINGS	Q'TY REEL	APPLICATOR	DIES
◎MM110-02B9	20-16	0.5-1.4	Brass	None	10000	CDM-98003-M	CDT-98003-M

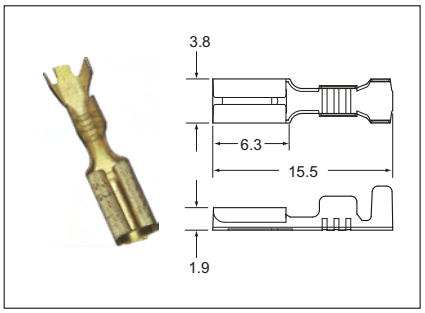

ITEM NO.	WIRE RANGE A.W.G.	WIRE RANGE mm²	MATERIAL	PLATINGS	Q'TY REEL	APPLICATOR	DIES
FM110-01B28	22-18	0.3-0.8	Brass	Tin	10000	CDM-93014-M	CDT-93014-M
FM110-01B98	22-18	0.3-0.8	Brass	None	10000	CDM-93014-M	CDT-93014-M
FM110-01BT8	22-18	0.3-0.8	Brass	Pre-Tin	10000	CDM-93014-M	CDT-93014-M

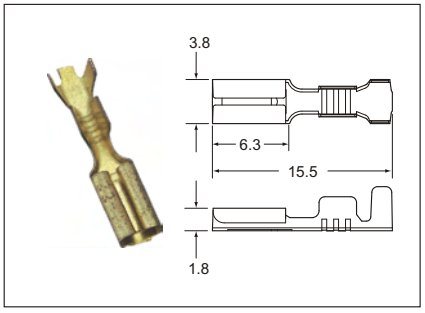

ITEM NO.	WIRE RANGE A.W.G.	WIRE RANGE mm²	MATERIAL	PLATINGS	Q'TY REEL	APPLICATOR	DIES
FM110-02B25	22-18	0.3-0.8	Brass	Tin	10000	CDM-98004-M	CDT-98004-M
FM110-02B95	22-18	0.3-0.8	Brass	None	10000	CDM-98004-M	CDT-98004-M
FM110-02BT5	22-18	0.3-0.8	Brass	Pre-Tin	10000	CDM-98004-M	CDT-98004-M
◎FM110-02B65	22-18	0.3-0.8	Brass	Nickel-gold	10000	CDM-98004-M	CDT-98004-M

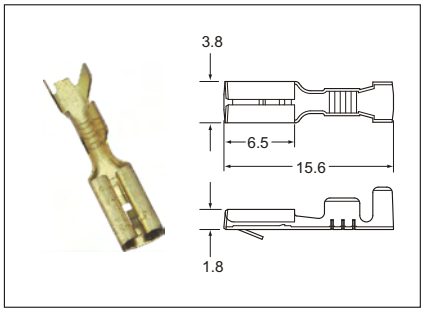

ITEM NO.	WIRE RANGE A.W.G.	WIRE RANGE mm²	MATERIAL	PLATINGS	Q'TY REEL	APPLICATOR	DIES
FM110-03B25	22-16	0.3-1.4	Brass	Tin	10000	CDM-93037-M	CDT-93037-M
FM110-03B95	22-16	0.3-1.4	Brass	None	10000	CDM-93037-M	CDT-93037-M
FM110-03BT5	22-16	0.3-1.4	Brass	Pre-Tin	10000	CDM-93037-M	CDT-93037-M

ALL LISTED
◎: NOT UL AND C-UL LISTED

110 SERIES TERMINALS

TERMINAL

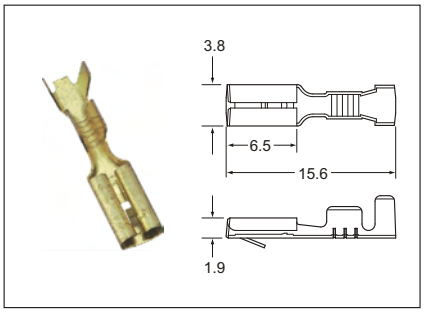

ITEM NO.	WIRE RANGE		MATERIAL	PLATINGS	Q'TY	APPLICATOR	DIES
	A.W.G.	mm^2			REEL		
FM110-04B28	22-16	0.3-1.4	Brass	None	10000	CDM-98002-M	CDT-98002-M
FM110-04B98	22-16	0.3-1.4	Brass	None	10000	CDM-98002-M	CDT-98002-M
FM110-04BT8	22-16	0.3-1.4	Brass	Pre-Tin	10000	CDM-98002-M	CDT-98002-M

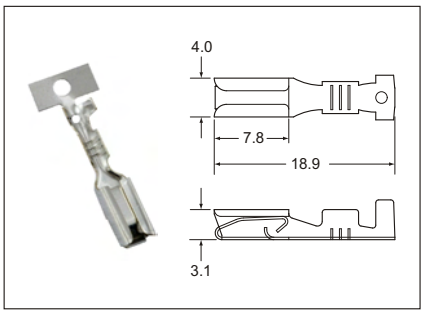

ITEM NO.	WIRE RANGE		MATERIAL	PLATINGS	Q'TY	APPLICATOR	DIES
	A.W.G.	mm^2			REEL		
1201A0265	22-20	0.3-0.5	Brass	Pre-Tin	5000	CDM-93110-S	CDT-93110-S
1201A0267	14	2.0	Brass	Pre-Tin	4000	CDM-96025-L	CDT-96025-L

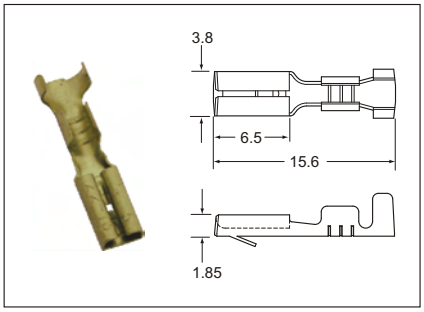

ITEM NO.	WIRE RANGE		MATERIAL	PLATINGS	Q'TY	APPLICATOR	DIES
	A.W.G.	mm^2			REEL		
FM110-07B95	22-16	0.3-1.25	Brass	None	10000	CDM-98005-M	CDT-98005-M

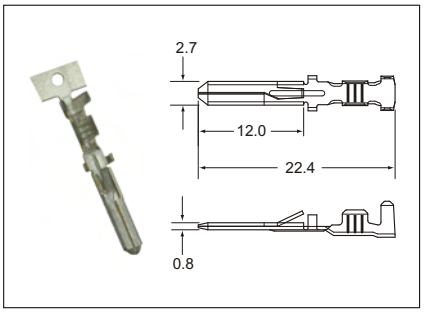

ITEM NO.	WIRE RANGE		MATERIAL	PLATINGS	Q'TY	APPLICATOR	DIES
	A.W.G.	mm^2			REEL		
1101A0336	20-16	0.5-1.0	Brass	Pre-Tin	3500	CDM-98007-M	CDT-98007-M

110 SERIES TERMINALS

TERMINAL

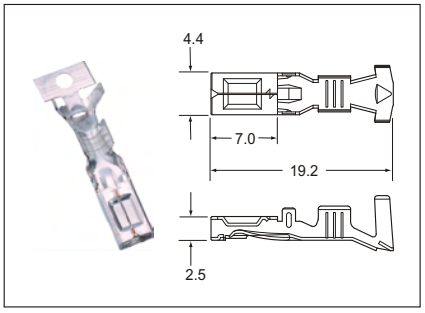

ITEM NO.	WIRE RANGE		MATERIAL	PLATINGS	Q'TY	APPLICATOR	DIES
	A.W.G.	mm²			REEL		
1211A0066	16	1.25	Copper Alloy	Pre-Tin	2500	CDM-94126-M	CDT-94126-M

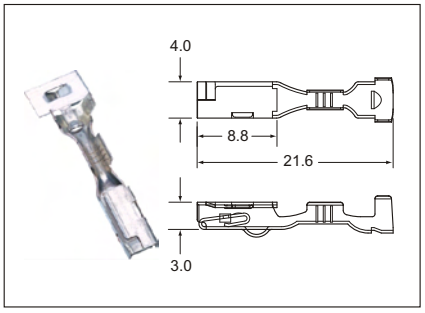

ITEM NO.	WIRE RANGE		MATERIAL	PLATINGS	Q'TY	APPLICATOR	DIES
	A.W.G.	mm²			REEL		
1211A0070	22	0.3	Copper Alloy	Pre-Tin	3000	CDM-94129-S	CDT-94129-S
1211A0071	18	0.85	Copper Alloy	Pre-Tin	3000	CDM-94129-M	CDT-94129-M

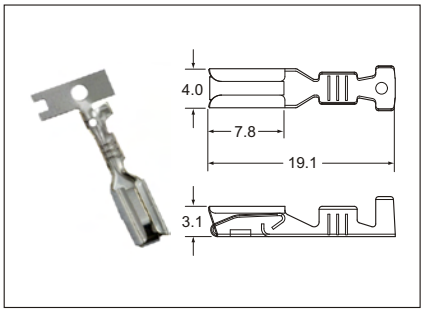

ITEM NO.	WIRE RANGE		MATERIAL	PLATINGS	Q'TY	APPLICATOR	DIES
	A.W.G.	mm²			REEL		
1201A0265	22-20	0.3-0.5	Brass	Pre-Tin	5000	CDM-98006-S	CDT-98006-S
1201A0267	14	2.0	Brass	Pre-Tin	4000	CDM-98006-L	CDT-98006-L

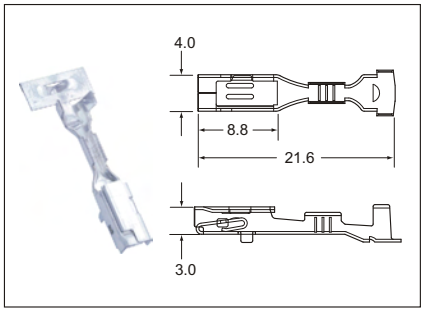

ITEM NO.	WIRE RANGE		MATERIAL	PLATINGS	Q'TY	APPLICATOR	DIES
	A.W.G.	mm²			REEL		
1211A0610	22-20	0.3-0.6	Copper Alloy	Pre-Tin	3000	CDM-96027-S	CDT-96027-S

118 SERIES

AUTOMOTIVE CONNECTORS

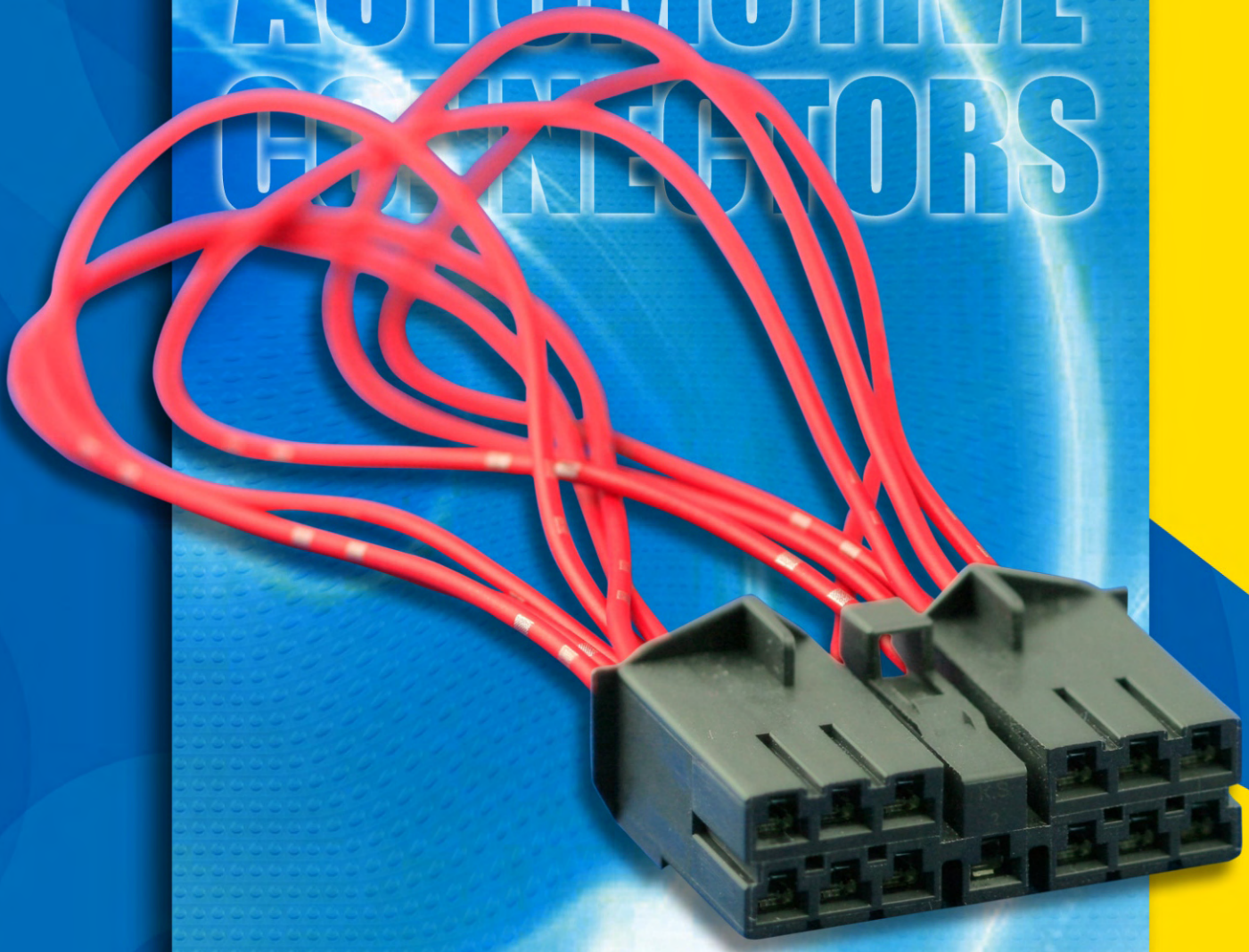

118 KETC
MULTIPLE INTERLOCK SERIES
UNSEALED

SPECIFICATIONS

Material	Connector	NY66
	Male Terminal	-
	Female Terminal	BRASS
Operating Temperature Range		-30°C~+105°C
Voltage Drop		3mV/A
Isolation Resistance		100MΩ
Dielectric Resistance		1800V
Applicable Wire Size		0.5mm^2 ~0.85mm^2 (20 AWG~18 AWG)
Maximum Electric Current		6A

118 KETC
MULTIPLE INTERLOCK SERIES
UNSEALED

TERMINAL

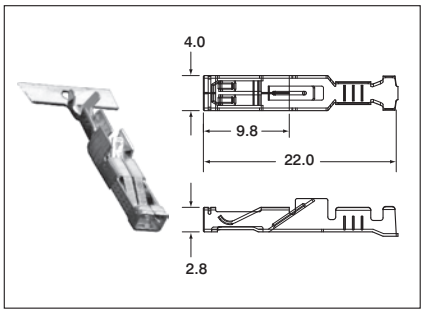

ITEM NO.	WIRE RANGE		MATERIAL	PLATINGS	Q'TY	APPLICATOR	DIES
	A.W.G.	mm^2			REEL		
1201A0470	20-18	0.5-0.85	Brass	Pre-Tin	4000	CDM-96024-S	CDT-96024-S

HOUSING

POLE		FEMALE
9		**3209A0472**  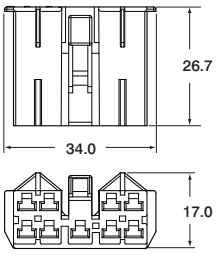 **100 PCS**
13		**3213A0472**  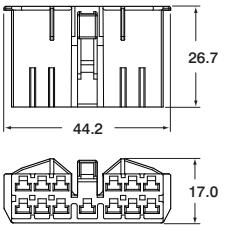 **50 PCS**

• HOUSING (UNIT:mm)
MATERIAL:NY66
COLOR:BLACK

118 SERIES

SPECIFICATIONS

Material	Connector	-
	Male Terminal	-
	Female Terminal	BRASS
Operating Temperature Range		-40°C~+120°C
Voltage Drop		3mV/A
Isolation Resistance		-
Dielectric Resistance		-
Applicable Wire Size		0.2mm^2 ~2.0mm^2 (24 AWG~14 AWG)
Maximum Electric Current		25A

118 SERIES

TERMINAL

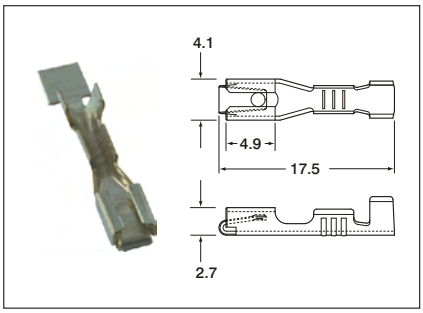

ITEM NO.	WIRE RANGE		MATERIAL	PLATINGS	Q'TY	APPLICATOR	DIES
	A.W.G.	mm^2			REEL		
1201A0175	24-20	0.2-0.5	Brass	Pre-Tin	4000	CDM-95020-S	CDT-95020-S
1201A0177	18-14	0.85-2.0	Brass	Pre-Tin	3000	CDM-95020-L	CDT-95020-L

187 SERIES

AUTOMOTIVE CONNEC

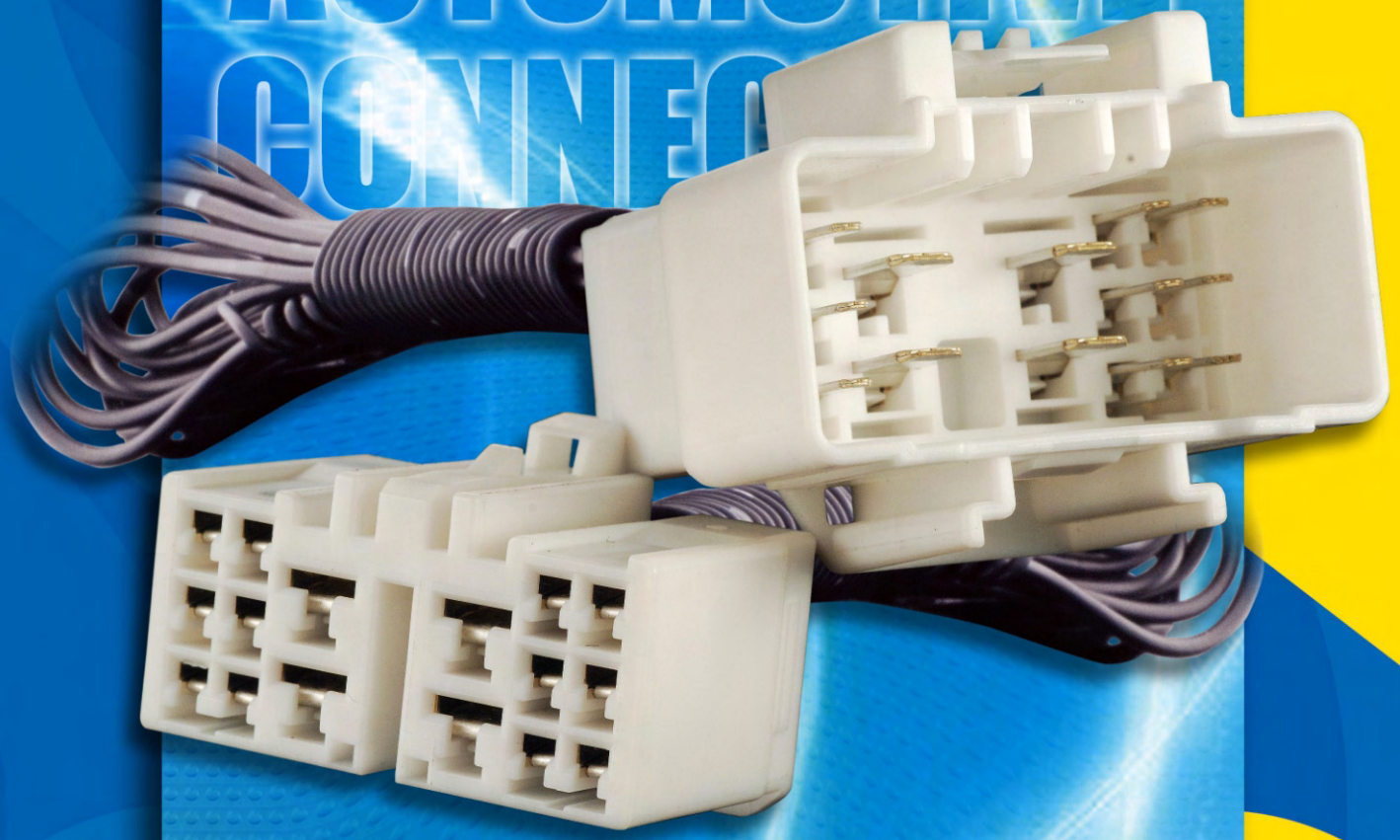

187 SMTO
TS SERIES
UNSEALED

CONSTRUCTION

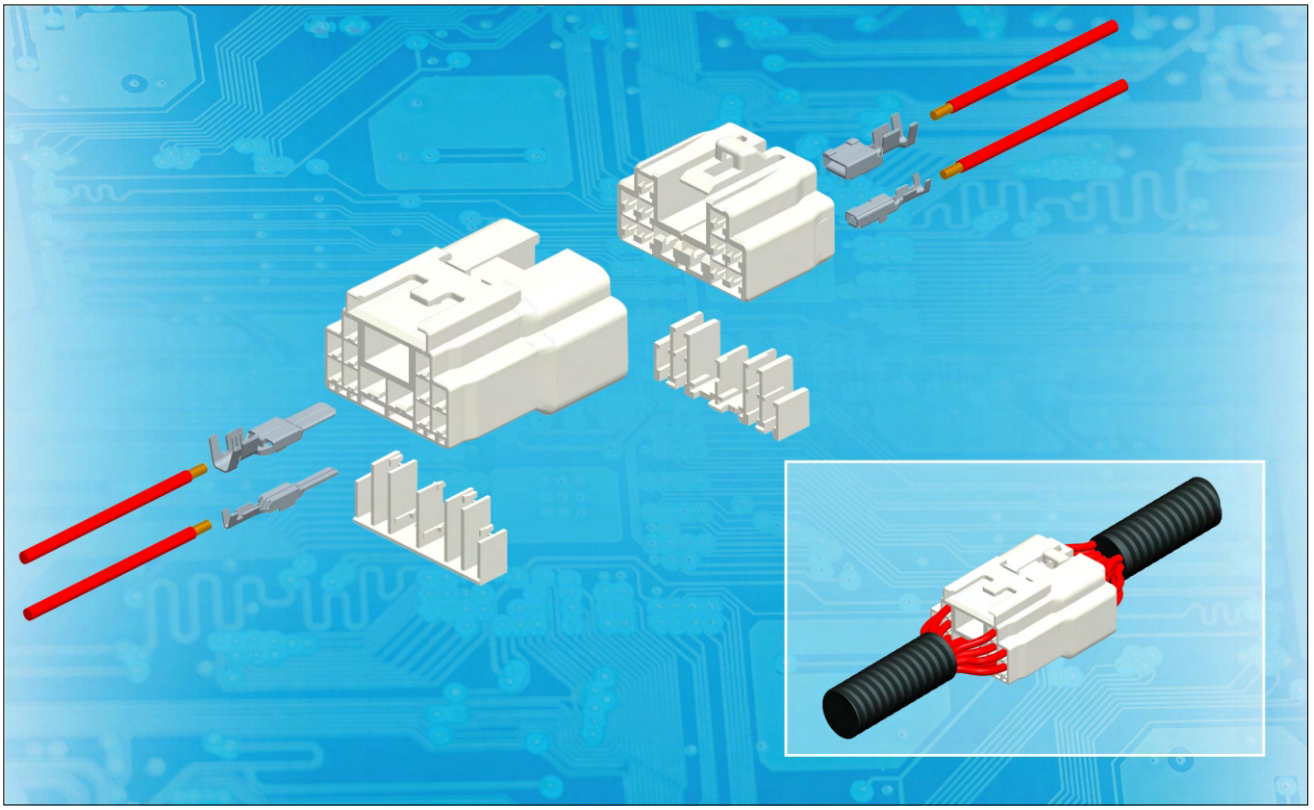

SPECIFICATIONS

Material	Connector	PBT
	Male Terminal	BRASS
	Female Terminal	BRASS
Operating Temperature Range		-40°C~+120°C
Voltage Drop		3mV/A
Isolation Resistance		100MΩ
Dielectric Resistance		1000V
Applicable Wire Size		0.3mm² ~3.0mm² (22 AWG~12 AWG)
Maximum Electric Current		16A

187 SMTO
TS SERIES
UNSEALED

TERMINAL

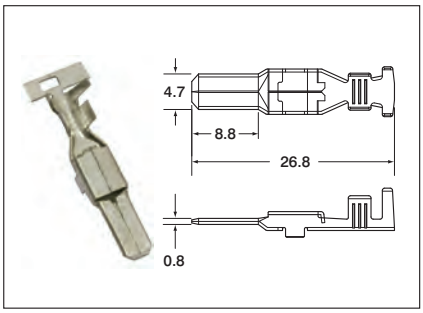

ITEM NO.	WIRE RANGE		MATERIAL	PLATINGS	Q'TY	APPLICATOR	DIES
	A.W.G.	mm²			REEL		
1101A0120	22-20	0.3-0.5	Brass	Pre-Tin	3000	CDM-97007-S	CDT-97007-S
1101A0121	18-16	0.85-1.25	Brass	Pre-Tin	3000	CDM-97007-M	CDT-97007-M
1101A0122	14-12	2.0-3.0	Brass	Pre-Tin	2000	CDM-97007-L	CDT-97007-L

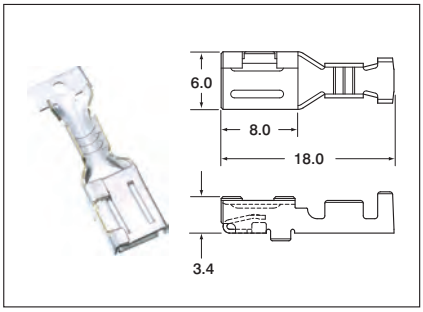

ITEM NO.	WIRE RANGE		MATERIAL	PLATINGS	Q'TY	APPLICATOR	DIES
	A.W.G.	mm²			REEL		
1201A0120	22-20	0.3-0.5	Brass	Pre-Tin	2500	CDM-95002-S	CDT-95002-S
1201A0121	18-16	0.85-1.25	Brass	Pre-Tin	2500	CDM-95002-M	CDT-95002-M
1201A0122	14-12	2.0-3.0	Brass	Pre-Tin	2000	CDM-95002-L	CDT-95002-L

HOUSING

POLE	MALE	FEMALE
1	**3101A0124**  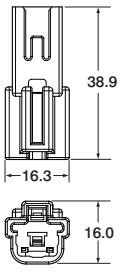 **50 PCS**	**3201A0124**  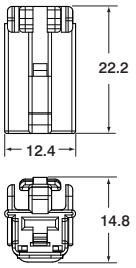 **50 PCS**
2	**3102A0124**  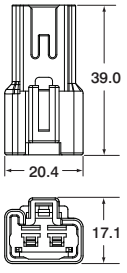 **100 PCS**	**3202A0124**  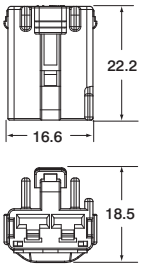 **100 PCS**

- HOUSING (UNIT:mm)
  MATERIAL:PBT
  COLOR:WHITE

187 SMTO
TS SERIES
UNSEALED

HOUSING

POLE	MALE	FEMALE
4	**3104A0124**  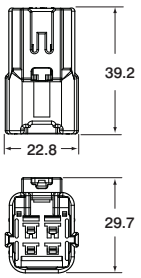 **50 PCS**	**3204A0124**  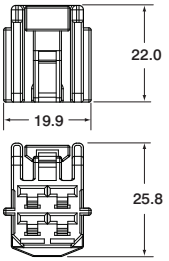 **50 PCS**
6	**3106A0124**  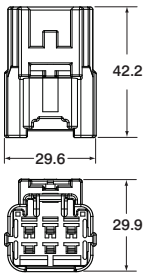 **50 PCS**	**3206A0124**  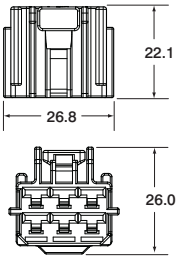 **50 PCS**
12	**3112A0124**  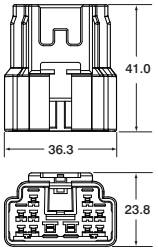 **50 PCS**	**3212A0124**  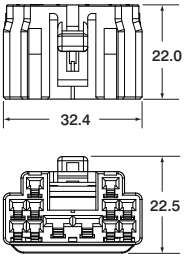 **50 PCS**

• HOUSING (UNIT:mm)
MATERIAL:PBT
COLOR:WHITE

187 KETC
HYBRID SERIES
UNSEALED

CONSTRUCTION

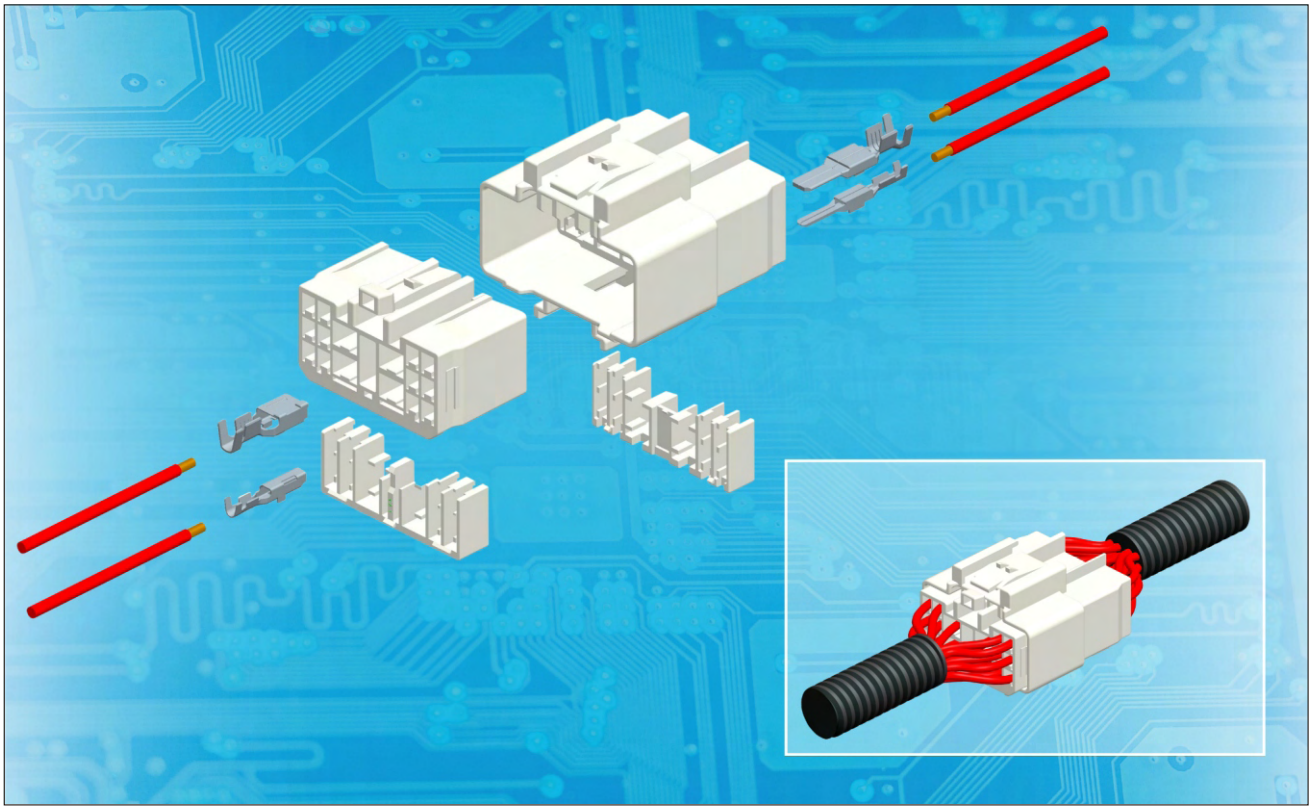

SPECIFICATIONS

Material	Connector	PBT
	Male Terminal	BRASS
	Female Terminal	BRASS OR COPPER ALLOY
Operating Temperature Range		-40°C~+120°C
Voltage Drop		3mV/A
Isolation Resistance		100MΩ
Dielectric Resistance		1000V
Applicable Wire Size		0.3mm² ~3.0mm² (22 AWG~12 AWG)
Maximum Electric Current		13A

187 KETC HYBRID SERIES

UNSEALED

TERMINAL

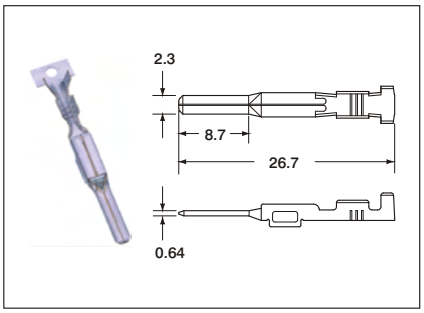

ITEM NO.	WIRE RANGE A.W.G.	WIRE RANGE mm²	MATERIAL	PLATINGS	Q'TY REEL	APPLICATOR	DIES
1101A0010	22-20	0.3-0.5	Brass	Pre-Tin	5000	CDM-94120-S	CDT-94120-S
1101A0011	20-16	0.5-1.25	Brass	Pre-Tin	5000	CDM-94120-M	CDT-94120-M
1101A0012	14	2.0	Brass	Pre-Tin	5000	CDM-94120-L	CDT-94120-L

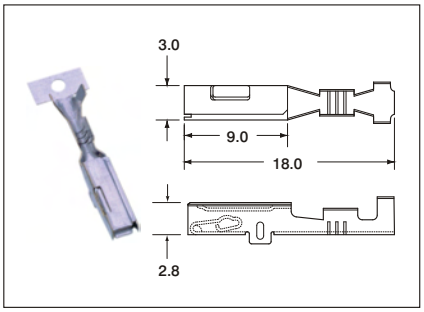

ITEM NO.	WIRE RANGE A.W.G.	WIRE RANGE mm²	MATERIAL	PLATINGS	Q'TY REEL	APPLICATOR	DIES
1201A0010	22-20	0.3-0.5	Brass	Pre-Tin	5000	CDM-94119-S	CDT-94119-S
1201A0011	20-16	0.5-1.25	Brass	Pre-Tin	4000	CDM-94119-M	CDT-94119-M
1201A0012	14	2.0	Brass	Pre-Tin	4000	CDM-94119-L	CDT-94119-L
1211A0012	14	2.0	Copper Alloy	Pre-Tin	4000	CDM-94119-L	CDT-94119-L

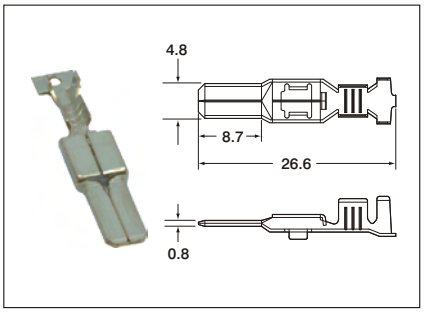

ITEM NO.	WIRE RANGE A.W.G.	WIRE RANGE mm²	MATERIAL	PLATINGS	Q'TY REEL	APPLICATOR	DIES
1101A0320	22-20	0.3-0.5	Brass	Pre-Tin	3000	CDM-95037-S	CDT-95037-S
1101A0321	18-16	0.85-1.25	Brass	Pre-Tin	2000	CDM-95037-M	CDT-95037-M
1101A0322	14-12	2.0-3.0	Brass	Pre-Tin	2000	CDM-95037-L	CDT-95037-L

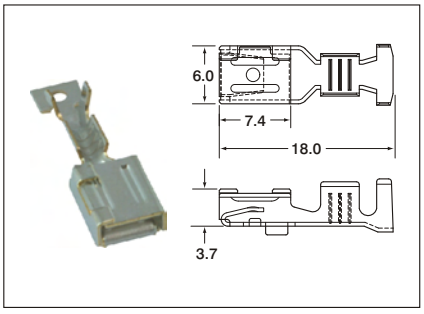

ITEM NO.	WIRE RANGE A.W.G.	WIRE RANGE mm²	MATERIAL	PLATINGS	Q'TY REEL	APPLICATOR	DIES
1201A0320	22-20	0.3-0.5	Brass	Pre-Tin	2000	CDM-96001-S	CDT-96001-S
1201A0321	18-16	0.85-1.25	Brass	Pre-Tin	2000	CDM-96001-M	CDT-96001-M
1201A0322	14-12	2.0-3.0	Brass	Pre-Tin	1500	CDM-96001-L	CDT-96001-L

187 KETC
HYBRID SERIES
UNSEALED

HOUSING

POLE	MALE	FEMALE
16	3116A0324  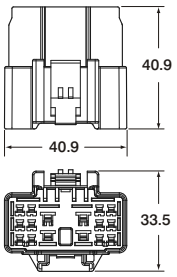 25 PCS	3216A0324  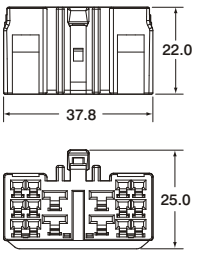 25 PCS

• HOUSING (UNIT:mm)
MATERIAL:PBT
COLOR:WHITE

187 KETC
WP II SERIES
SEALED

CONSTRUCTION

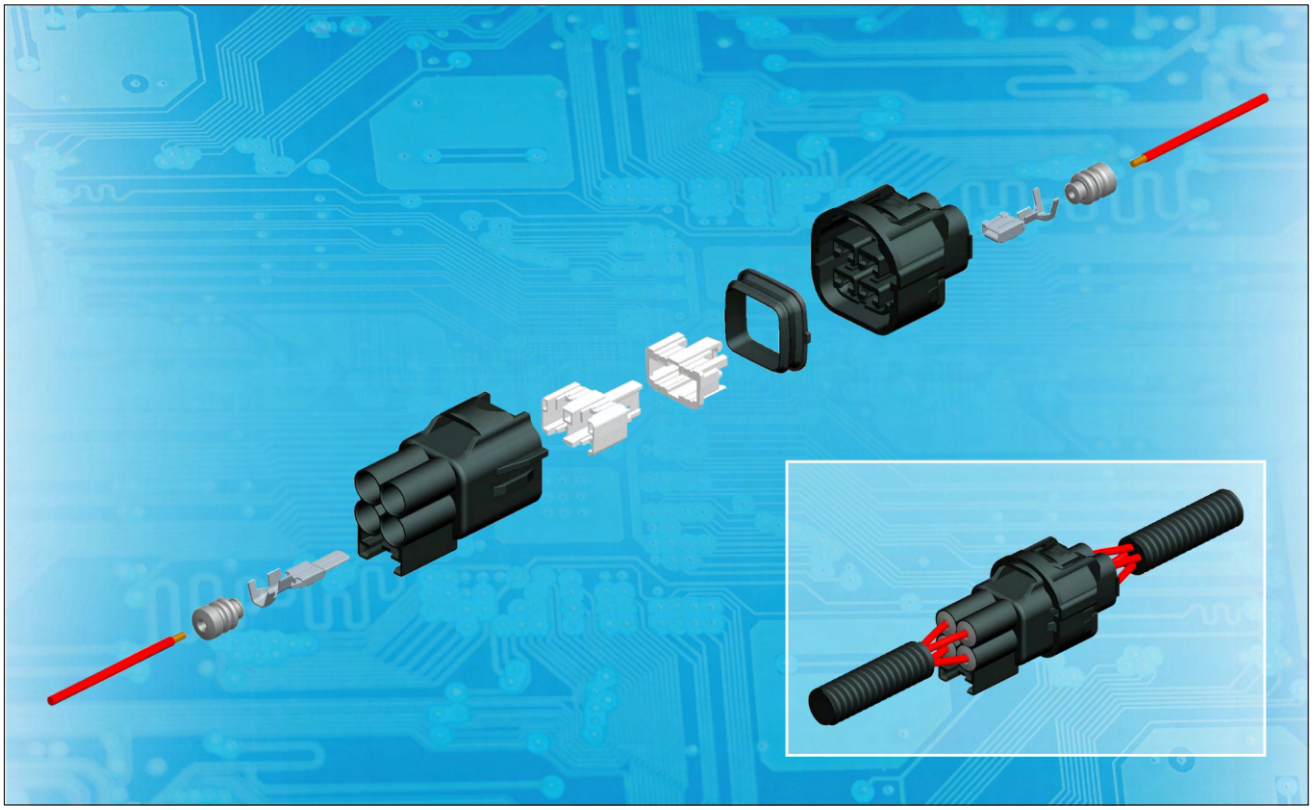

SPECIFICATIONS

Material	Connector	PBT
	Male Terminal	BRASS
	Female Terminal	BRASS
Operating Temperature Range		-40°C~+120°C
Voltage Drop		3mV/A
Isolation Resistance		100MΩ
Dielectric Resistance		1000V
Applicable Wire Size		0.3mm² ~3.0mm² (22 AWG~12 AWG)
Maximum Electric Current		20A

187 KETC
WP II SERIES
SEALED

TERMINAL

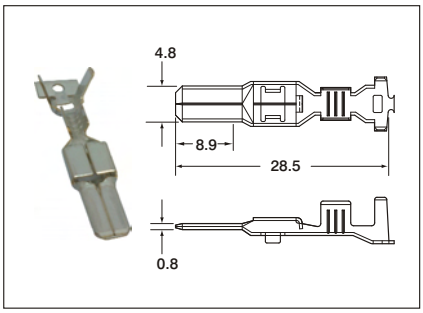

ITEM NO.	WIRE RANGE		MATERIAL	PLATINGS	Q'TY	APPLICATOR	DIES
	A.W.G.	mm^2			REEL		
1101A0360	22-20	0.3-0.5	Brass	Pre-Tin	1500	CDM-95036-S	CDT-95036-S
1101A0361	18-16	0.85-1.25	Brass	Pre-Tin	1500	CDM-95036-M	CDT-95036-M
1101A0362	14-12	2.0-3.0	Brass	Pre-Tin	1500	CDM-95036-L	CDT-95036-L

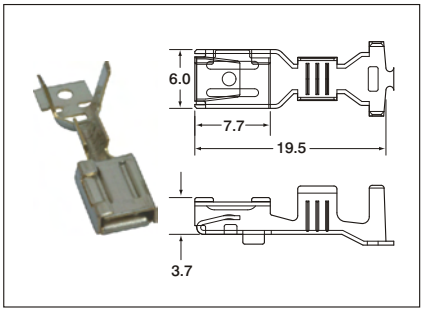

ITEM NO.	WIRE RANGE		MATERIAL	PLATINGS	Q'TY	APPLICATOR	DIES
	A.W.G.	mm^2			REEL		
1201A0360	22-20	0.3-0.5	Brass	Pre-Tin	1500	CDM-96002-S	CDT-96002-S
1201A0361	18-16	0.85-1.25	Brass	Pre-Tin	1500	CDM-96002-M	CDT-96002-M
1201A0362	14-12	2.0-3.0	Brass	Pre-Tin	1500	CDM-96002-L	CDT-96002-L

HOUSING

POLE	MALE	FEMALE
4	**3104A0362**  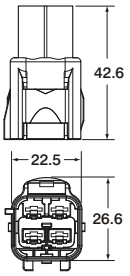 **50 PCS**	**3204A0362**  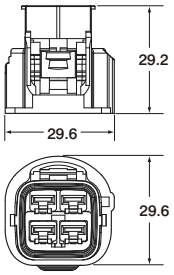 **50 PCS**

- HOUSING (UNIT:mm)
  MATERIAL:HOUSING:PBT
  LOCK:PBT
  COLOR:HOUSING:BACK
  LOCK:WHITE

187 AM
STANDARD POWER TIMER
SEALED

CONSTRUCTION

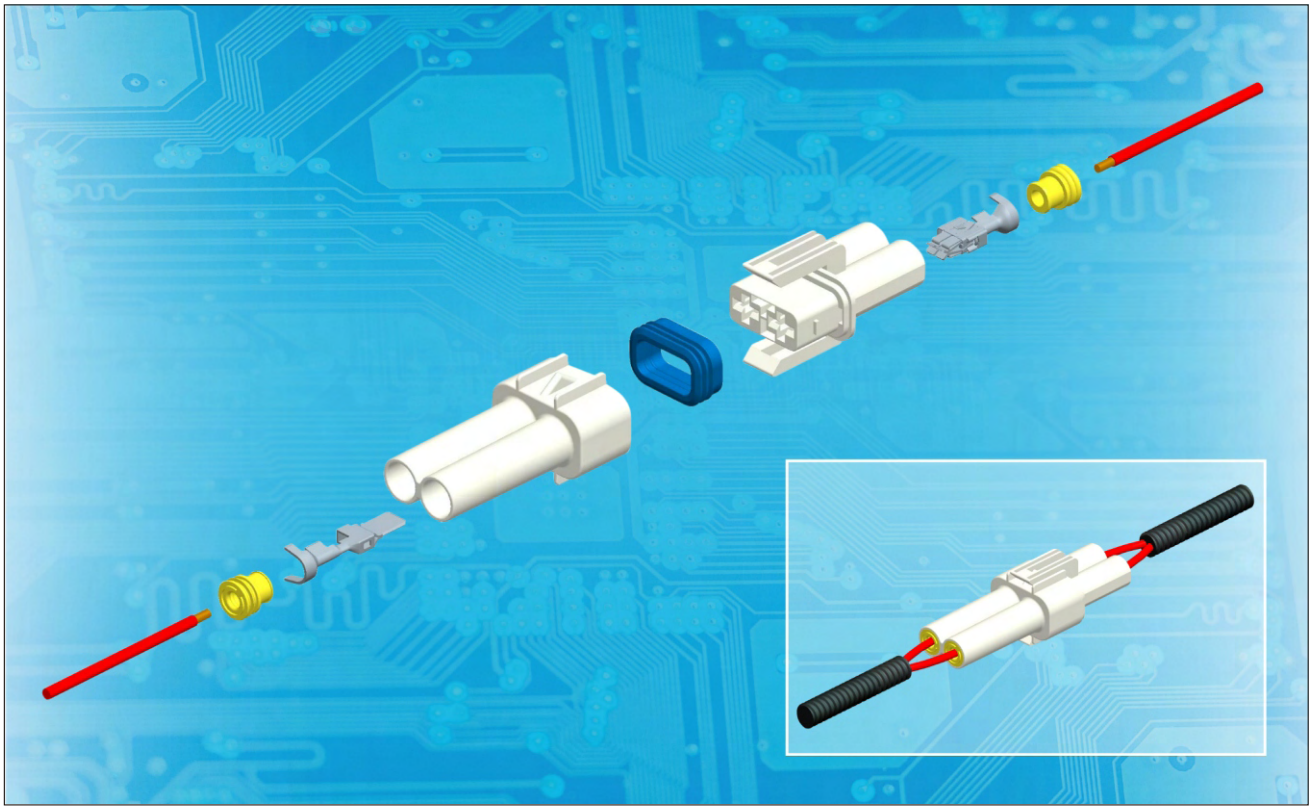

SPECIFICATIONS

Material	Connector	PBT
	Male Terminal	PHOSPHOR BRONZE
	Female Terminal	PHOSPHOR BRONZE
Operating Temperature Range		-40°C~+105°C
Voltage Drop		5mV/A
Isolation Resistance		100MΩ
Dielectric Resistance		1000V
Applicable Wire Size		1.5mm² ~2.5mm² (18 AWG~14 AWG)
Maximum Electric Current		18A

187 AM
STANDARD POWER TIMER
SEALED

TERMINAL

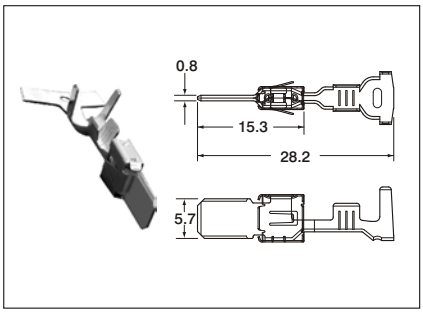

ITEM NO.	WIRE RANGE		MATERIAL	PLATINGS	Q'TY	APPLICATOR	DIES
	A.W.G.	mm^2			REEL		
1121Z0122	18-14	1.5-2.5	Phosphor Bronze	Pre-Tin	1300	CDM-96021-L	CDT-96021-L

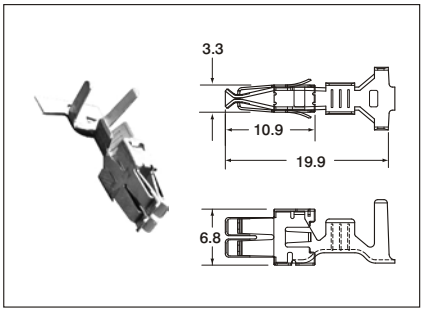

ITEM NO.	WIRE RANGE		MATERIAL	PLATINGS	Q'TY	APPLICATOR	DIES
	A.W.G.	mm^2			REEL		
1221Z0122	18-14	1.5-2.5	Phosphor Bronze	Pre-Tin	1300	CDM-96022-L	CDT-96022-L

RUBBER SEAL

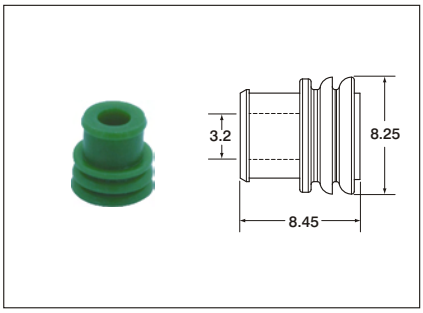

ITEM NO.	MATERIAL	COLOR	Q'TY	APPLICABLE HOUSINGS
7001Z0127	SILICONE	YELLOW	1000	STANDARD POWER TIMER

187 AM
STANDARD POWER TIMER
SEALED

HOUSING

POLE	MALE	FEMALE
2	3102Z0129  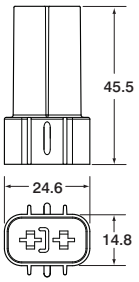 50 PCS	3202Z0129  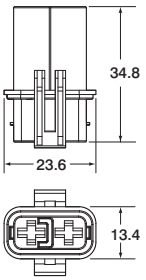 100 PCS

POLE	MALE	FEMALE
2	3102Z0139  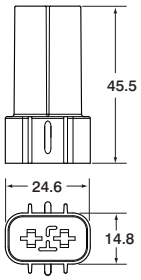 50 PCS	3202Z0139  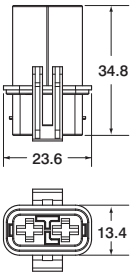 100 PCS

• HOUSING (UNIT:mm)
MATERIAL:PBT
COLOR:GREY

187
VR2
UNSEALED

SPECIFICATIONS

Material	Connector	NY66
	Male Terminal	-
	Female Terminal	PBS STAINLESS STEEL
Operating Temperature Range		-40°C~+130°C
Voltage Drop		5mV/A
Isolation Resistance		100MΩ
Dielectric Resistance		1000V
Applicable Wire Size		0.2mm² ~4.0mm² (24 AWG~12 AWG)
Maximum Electric Current		25A

187
VR2
UNSEALED

TERMINAL

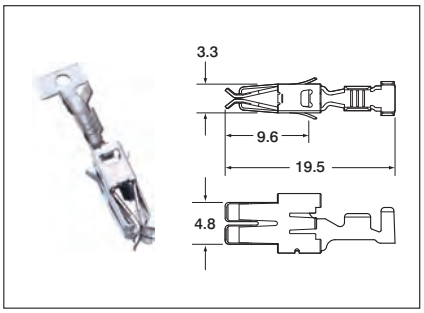

ITEM NO.	WIRE RANGE		MATERIAL	PLATINGS	Q'TY	APPLICATOR	DIES
	A.W.G.	mm^2			REEL		
1221A0125	24-20	0.2-0.5	PBS Stainless Steel	Pre-Tin	2000	CDM-94132-S	CDT-94132-S
1221A0126	20-18	0.5-0.85	PBS Stainless Steel	Pre-Tin	2000	CDM-94132-M	CDT-94132-M
1221A0127	16-14	1.25-2.0	PBS Stainless Steel	Pre-Tin	1500	CDM-94132-L	CDT-94132-L
1221A0128	14-12	2.0-4.0	PBS Stainless Steel	Pre-Tin	1500	CDM-94132-L	CDT-94132-L

HOUSING

POLE		FEMALE
2		**3202A0701**  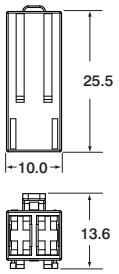 **100 PCS**
3		**3203A0702**  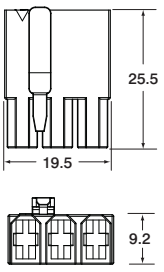 **50 PCS**

• HOUSING (UNIT:mm)
MATERIAL:NY66
COLOR:3202A0701:NATURAL
3203A0702:BLACK

187 SERIES

SPECIFICATIONS

Material	Connector	-
	Male Terminal	BRASS
	Female Terminal	COPPER ALLOY
Operating Temperature Range		-40°C~+120°C
Voltage Drop		3mV/A
Isolation Resistance		-
Dielectric Resistance		-
Applicable Wire Size		0.3mm^2 ~3.0mm^2 (22 AWG~12 AWG)
Maximum Electric Current		30A

187 SERIES

TERMINAL

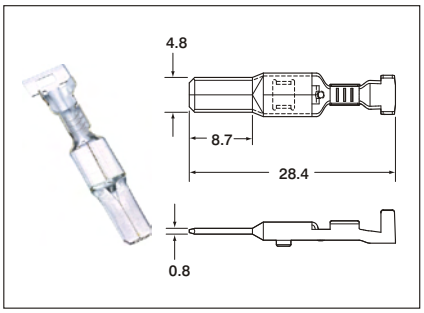

ITEM NO.	WIRE RANGE		MATERIAL	PLATINGS	Q'TY	APPLICATOR	DIES
	A.W.G.	mm^2			REEL		
1101A0065	22-20	0.3-0.5	Brass	Pre-Tin	3000	CDM-95004-S	CDT-95004-S
1101A0066	20-16	0.5-1.25	Brass	Pre-Tin	3000	CDM-95004-M	CDT-95004-M
1101A0067	14-12	2.0-3.0	Brass	Pre-Tin	2500	CDM-95004-L	CDT-95004-L

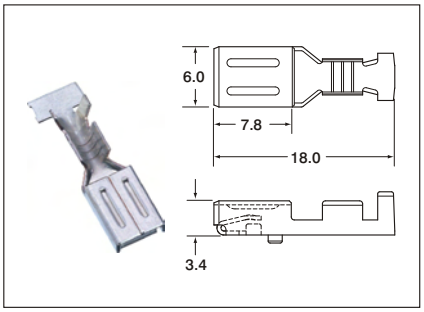

ITEM NO.	WIRE RANGE		MATERIAL	PLATINGS	Q'TY	APPLICATOR	DIES
	A.W.G.	mm^2			REEL		
1211A0115	22-20	0.3-0.5	Copper Alloy	Pre-Tin	3000	CDM-94133-S	CDT-94133-S
1211A0116	20-16	0.5-1.25	Copper Alloy	Pre-Tin	2500	CDM-94133-M	CDT-94133-M
1211A0117	14-12	2.0-3.0	Copper Alloy	Pre-Tin	2000	CDM-94133-L	CDT-94133-L

187 SERIES

SPECIFICATIONS

Material	Connector	-
	Male Terminal	-
	Female Terminal	BRASS
Operating Temperature Range		-40°C~+120°C
Voltage Drop		3mV/A
Isolation Resistance		-
Dielectric Resistance		-
Applicable Wire Size		0.3mm^2 ~2.0mm^2 (22 AWG~14 AWG)
Maximum Electric Current		25A

187 SERIES

TERMINAL

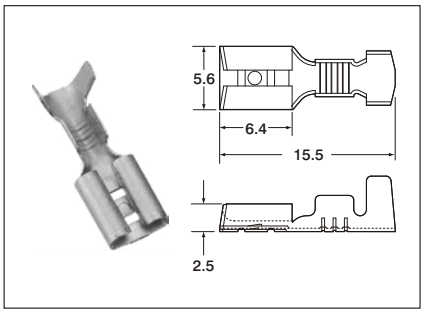

ITEM NO.	WIRE RANGE A.W.G.	WIRE RANGE mm²	MATERIAL	PLATINGS	Q'TY REEL	APPLICATOR	DIES
FM187-01B25	22-16	0.3-1.4	Brass	Tin	7500	CDM-93023-M	CDT-93023-M
FM187-01B95	22-16	0.3-1.4	Brass	None	7500	CDM-93023-M	CDT-93023-M
FM187-01BT5	22-16	0.3-1.4	Brass	Pre-Tin	7500	CDM-93023-M	CDT-93023-M
FM187-02B28	22-16	0.3-1.4	Brass	Tin	7500	CDM-94012-M	CDT-94012-M
FM187-02B98	22-16	0.3-1.4	Brass	None	7500	CDM-94012-M	CDT-94012-M
FM187-02BT8	22-16	0.3-1.4	Brass	Pre-Tin	7500	CDM-94012-M	CDT-94012-M

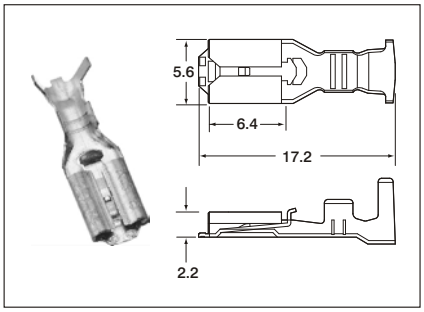

ITEM NO.	WIRE RANGE A.W.G.	WIRE RANGE mm²	MATERIAL	PLATINGS	Q'TY REEL	APPLICATOR	DIES
FL187-03BT8	20-14	0.5-2.0	Brass	Pre-Tin	7500	CDM-95017-L	CDT-95017-L

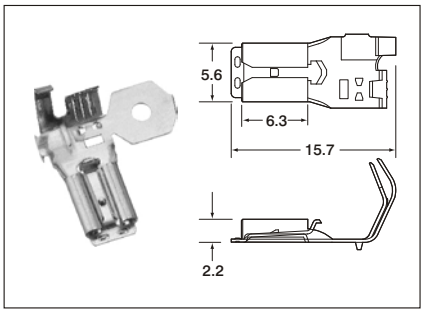

ITEM NO.	WIRE RANGE A.W.G.	WIRE RANGE mm²	MATERIAL	PLATINGS	Q'TY REEL	APPLICATOR	DIES
GM187-01BT5	22-16	0.3-1.4	Brass	Pre-Tin	5000	CDM-95015-M	CDT-95015-M

ALL LISTED

205 SERIES

AUTOMOTIVE CONNECTORS





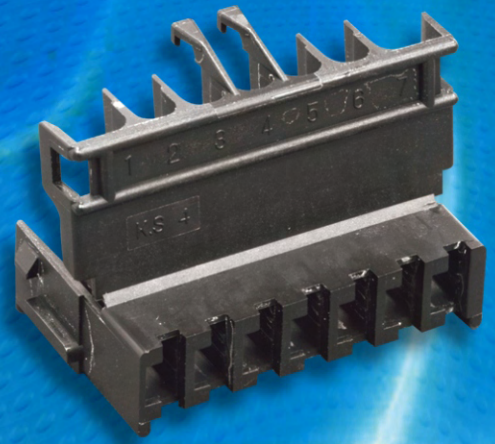

205 KST
UNSEALED

SPECIFICATIONS

Material	Connector	NY66
	Male Terminal	-
	Female Terminal	BRASS
Operating Temperature Range		-40°C~+120°C
Voltage Drop		5mV/A
Isolation Resistance		100MΩ
Dielectric Resistance		1000V
Applicable Wire Size		0.3mm^2 ~2.0mm^2 (20 AWG~14 AWG)
Maximum Electric Current		13A

205 KST
UNSEALED

TERMINAL

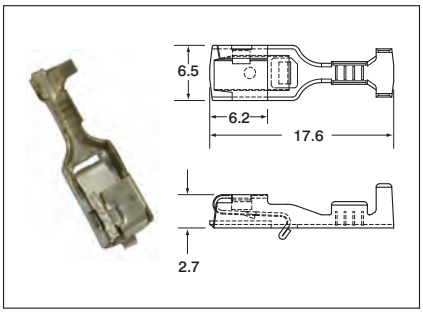

ITEM NO.	WIRE RANGE		MATERIAL	PLATINGS	Q'TY	APPLICATOR	DIES
	A.W.G.	mm^2			REEL		
1201A0460	20-18	0.3-0.85	Brass	Pre-Tin	5000	CDM-97021-S	CDT-97021-S
1201A0462	14	2.0	Brass	Pre-Tin	5000	CDM-97021-L	CDT-97021-L

HOUSING

POLE		FEMALE
2		**3202A0462**  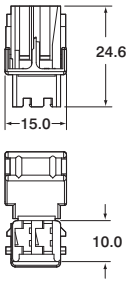 **100 PCS**
3		**3203A0462** 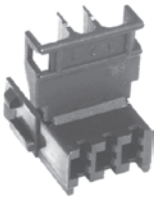 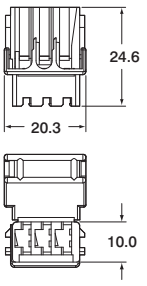 **100 PCS**
5		**3205A0462**  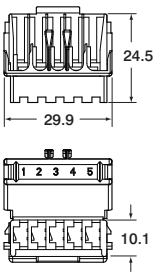 **100 PCS**

- HOUSING (UNIT:mm)
  MATERIAL:NY66
  COLOR:BLACK

205 KST

UNSEALED

HOUSING

POLE		FEMALE
7		**3207A0462**  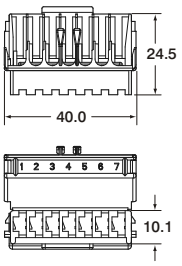 **50 PCS**

• HOUSING (UNIT:mm)
MATERIAL:NY66
COLOR:BLACK

205 SERIES

SPECIFICATIONS

Material	Connector	-
	Male Terminal	-
	Female Terminal	COPPER ALLOY OR BRASS
Operating Temperature Range		-30°C~+150°C
Voltage Drop		3mV/A
Isolation Resistance		-
Dielectric Resistance		-
Applicable Wire Size		0.3mm^2 ~6.0mm^2 (22 AWG~10 AWG)
Maximum Electric Current		40A

205 SERIES

TERMINAL

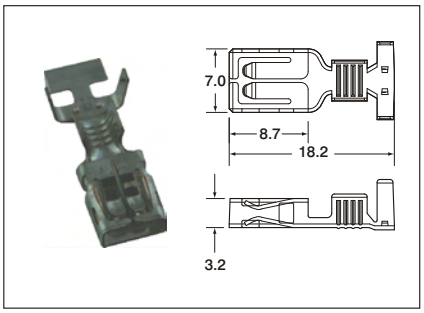

ITEM NO.	WIRE RANGE		MATERIAL	PLATINGS	Q'TY	APPLICATOR	DIES
	A.W.G.	mm^2			REEL		
1211A0211	20-16	0.5-1.25	Copper Alloy	Pre-Tin	2000	CDM-95033-M	CDT-95033-M
1211A0212	20-14	0.5-2.0	Copper Alloy	Pre-Tin	2000	CDM-95033-L	CDT-95033-L

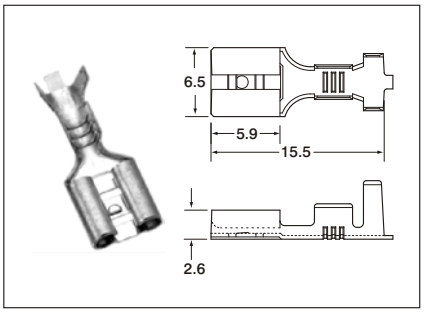

ITEM NO.	WIRE RANGE		MATERIAL	PLATINGS	Q'TY	APPLICATOR	DIES
	A.W.G.	mm^2			REEL		
FM205-01B27	22-16	0.3-1.4	Brass	Tin	7500	CDM-93018-M	CDT-93018-M
FM205-01B97	22-16	0.3-1.4	Brass	None	7500	CDM-93018-M	CDT-93018-M
FM205-01BT7	22-16	0.3-1.4	Brass	Pre-Tin	7500	CDM-93018-M	CDT-93018-M

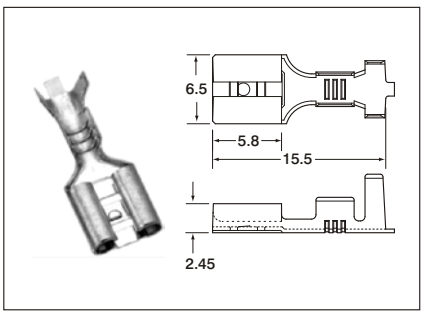

ITEM NO.	WIRE RANGE		MATERIAL	PLATINGS	Q'TY	APPLICATOR	DIES
	A.W.G.	mm^2			REEL		
FM205-02B25	22-16	0.3-1.4	Brass	Tin	7500	CDM-93018-M	CDT-93018-M
FM205-02B95	22-16	0.3-1.4	Brass	None	7500	CDM-93018-M	CDT-93018-M
FM205-02BT5	22-16	0.3-1.4	Brass	Pre-Tin	7500	CDM-93018-M	CDT-93018-M

ALL LISTED

205 SERIES

TERMINAL

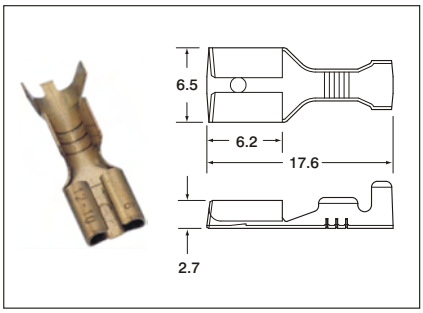

ALL LISTED

ITEM NO.	WIRE RANGE		MATERIAL	PLATINGS	Q'TY	APPLICATOR	DIES
	A.W.G.	mm^2			REEL		
FL205-03B28	18-14	0.8-2.0	Brass	Tin	5000	CDM-93042-L	CDT-93042-L
FL205-03B98	18-14	0.8-2.0	Brass	None	5000	CDM-93042-L	CDT-93042-L
FL205-03BT8	18-14	0.8-2.0	Brass	Pre-Tin	5000	CDM-93042-L	CDT-93042-L
FJ205-03B28	12-10	3.0-6.0	Brass	Tin	5000	CDM-93041-J	CDT-93041-J
FJ205-03B98	12-10	3.0-6.0	Brass	None	5000	CDM-93041-J	CDT-93041-J
FJ205-03BT8	12-10	3.0-6.0	Brass	Pre-Tin	5000	CDM-93041-J	CDT-93041-J
FL205-04B26	18-14	0.8-2.0	Brass	Tin	5000	CDM-98008-L	CDT-98008-L
FL205-04B96	18-14	0.8-2.0	Brass	None	5000	CDM-98008-L	CDT-98008-L
FL205-04BT6	18-14	0.8-2.0	Brass	Pre-Tin	5000	CDM-98008-L	CDT-98008-L
FJ205-04B26	12-10	3.0-6.0	Brass	Tin	5000	CDM-98009-J	CDT-98009-J
FJ205-04B96	12-10	3.0-6.0	Brass	None	5000	CDM-98009-J	CDT-98009-J
FJ205-04BT6	12-10	3.0-6.0	Brass	Pre-Tin	5000	CDM-98009-J	CDT-98009-J

250 SERIES AUTOMOTIVE CONNECTORS



250 AM
EJ-II SERIES
SEALED

CONSTRUCTION

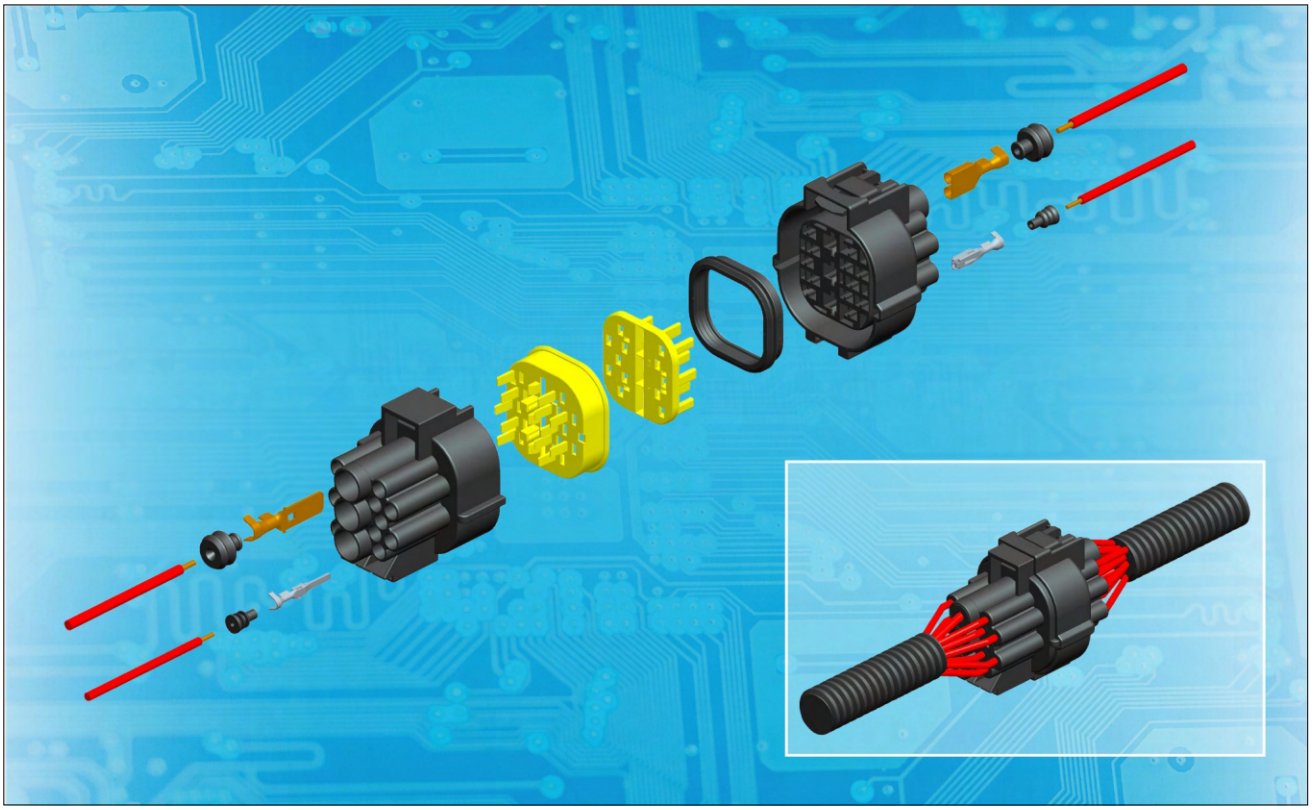

SPECIFICATIONS

Material	Connector	PBT
	Male Terminal	BRASS
	Female Terminal	BRASS
Operating Temperature Range		-30°C~+105°C
Voltage Drop		3mV/A
Isolation Resistance		100MΩ
Dielectric Resistance		1000V
Applicable Wire Size		0.85mm² ~1.25mm² (18 AWG~16 AWG)
Maximum Electric Current		7A

250 AM
EJ-II SERIES
SEALED

TERMINAL

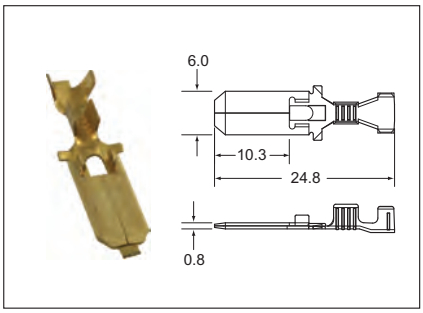

ITEM NO.	WIRE RANGE		MATERIAL	PLATINGS	Q'TY	APPLICATOR	DIES
	A.W.G.	mm^2			REEL		
1100A0351	18-16	0.85-1.25	Brass	None	6000	CDM-95034-M	CDT-95034-M

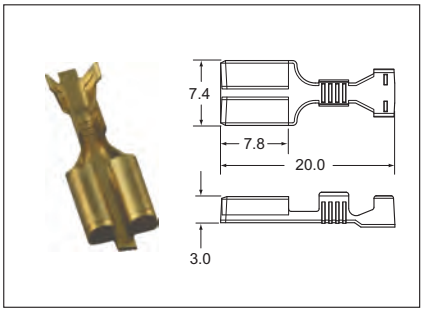

ITEM NO.	WIRE RANGE		MATERIAL	PLATINGS	Q'TY	APPLICATOR	DIES
	A.W.G.	mm^2			REEL		
1200A0351	18-16	0.85-1.25	Brass	None	6000	CDM-95031-M	CDT-95031-M

HOUSING

POLE	MALE	LOCK	FEMALE	LOCK
15	3115A0352 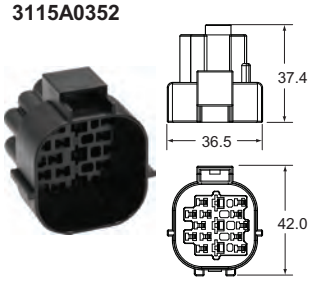 25 PCS	3615A0353 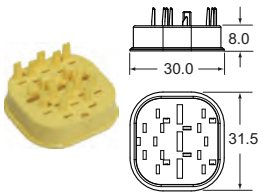 100 PCS	3215A0352 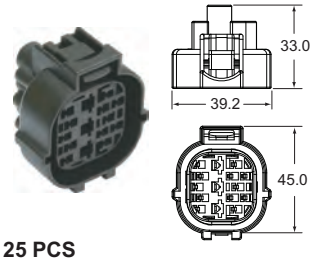 25 PCS	3715A0353 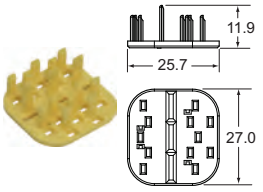 100 PCS

- HOUSING (UNIT:mm)
  MATERIAL:PBT
  COLOR:HOUSING:BLACK
  LOCK:YELLOW

250 YK
WPC SERIES
SEALED

CONSTRUCTION

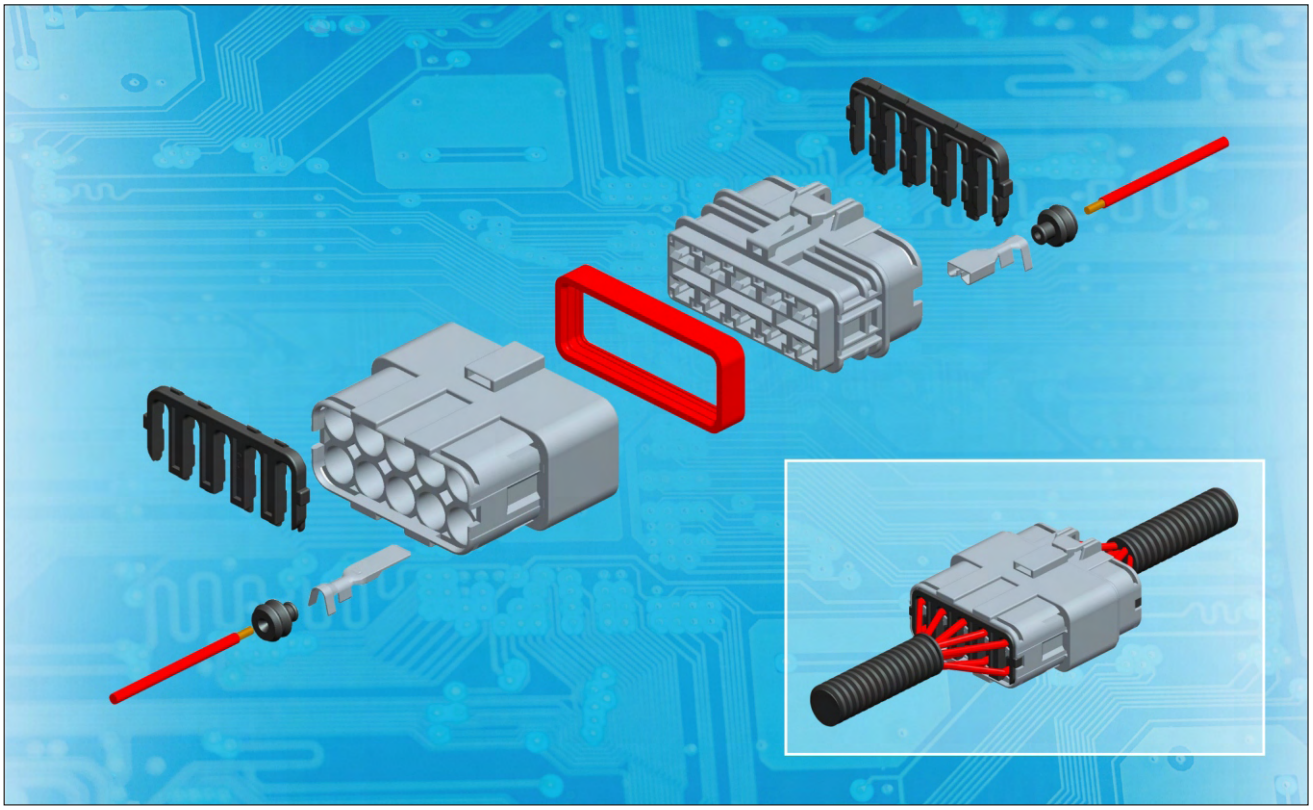

SPECIFICATIONS

Material	Connector	PBT
	Male Terminal	BRASS
	Female Terminal	BRASS
Operating Temperature Range		-40°C~+120°C
Voltage Drop		3mV/A
Isolation Resistance		100MΩ
Dielectric Resistance		1000V
Applicable Wire Size		0.5mm² ~3.0mm² (22 AWG~12 AWG)
Maximum Electric Current		16A

250 YK
WPC SERIES
SEALED

TERMINAL

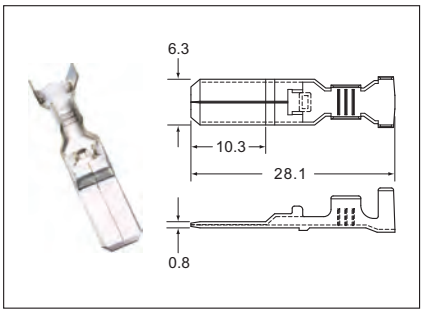

ITEM NO.	WIRE RANGE A.W.G.	WIRE RANGE mm^2	MATERIAL	PLATINGS	Q'TY REEL	APPLICATOR	DIES
1101A0181	22-16	0.5-1.25	Brass	Pre-Tin	3000	CDM-95027-M	CDT-95027-M
1101A0182	14-12	2.0-3.0	Brass	Pre-Tin	3000	CDM-95027-L	CDT-95027-L

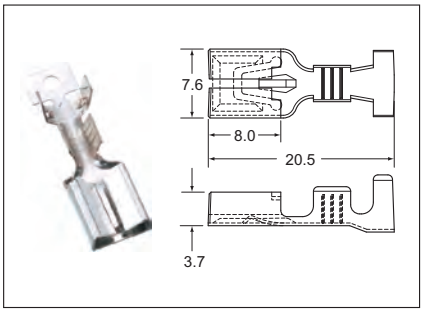

ITEM NO.	WIRE RANGE A.W.G.	WIRE RANGE mm^2	MATERIAL	PLATINGS	Q'TY REEL	APPLICATOR	DIES
1201A0181	18-16	0.85-1.25	Brass	Pre-Tin	4000	CDM-95028-M	CDT-95028-M
1201A0182	14-12	2.0-3.0	Brass	Pre-Tin	4000	CDM-95028-L	CDT-95028-L

HOUSING

POLE	MALE	FEMALE	LOCK
2	**3102A0189**  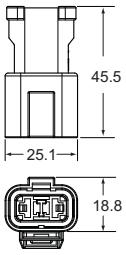 **50 PCS**	**3202A0189**  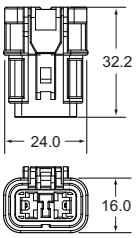 **100 PCS**	**4202A0182**  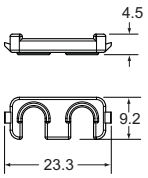 **100 PCS**

- HOUSING (UNIT:mm)
  MATERIAL:PBT
  COLOR:HOUSING:GREY
  LOCK:BLACK

250 YK
WPC SERIES
SEALED

HOUSING

POLE	MALE	FEMALE	LOCK
4	**3104A0189**  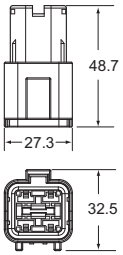 **25 PCS**	**3204A0189**  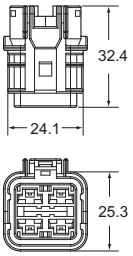 **25 PCS**	**4204A0182**  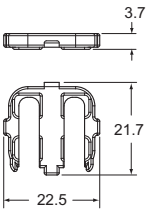 **100 PCS**
10	**3110A0189**  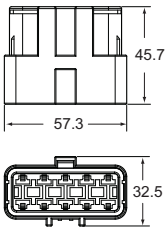 **25 PCS**	**3210A0189**  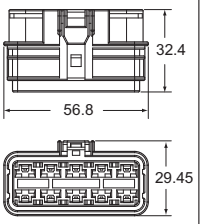 **10 PCS**	**4210A0182**  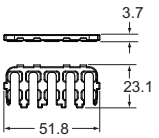 **100 PCS**

- HOUSING (UNIT:mm)
  MATERIAL:PBT
  COLOR:HOUSING:GREY
  LOCK:BLACK

250
STANDARD TYPE
UNSEALED

CONSTRUCTION

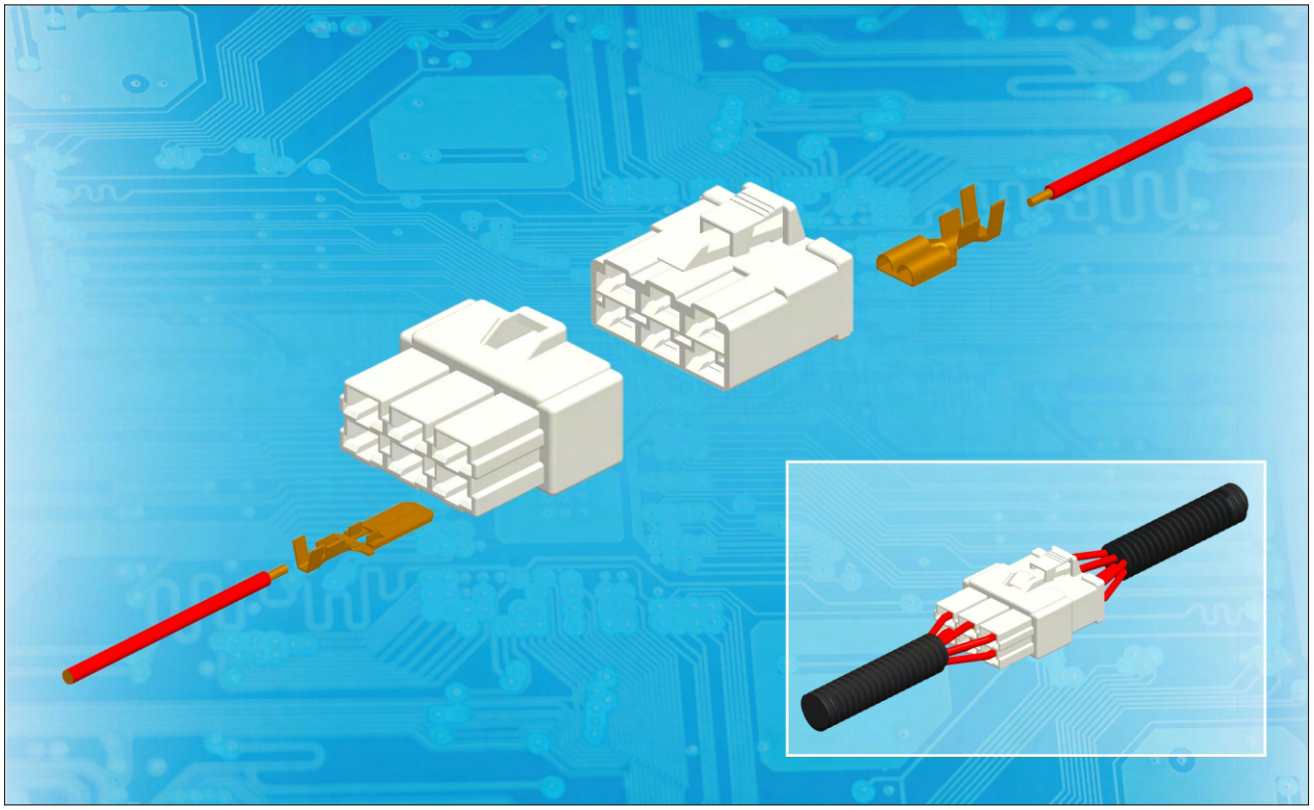

SPECIFICATIONS

Material	Connector	NY66
	Male Terminal	BRASS
	Female Terminal	BRASS
Operating Temperature Range		-40°C~+120°C
Voltage Drop		5mV/A
Isolation Resistance		100MΩ
Dielectric Resistance		1000V
Applicable Wire Size		0.3mm² ~3.0mm² (22 AWG~12 AWG)
Maximum Electric Current		18A

250
STANDARD TYPE
UNSEALED

TERMINAL

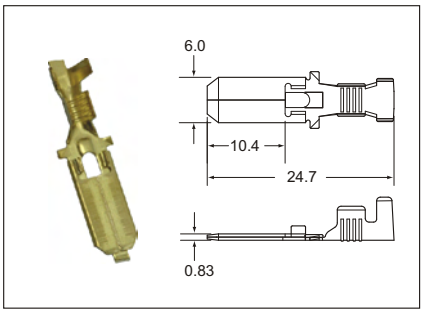

ITEM NO.	WIRE RANGE		MATERIAL	PLATINGS	Q'TY REEL	APPLICATOR	DIES
	A.W.G.	mm²					
1100A0800	22-20	0.3-0.5	Brass	None	5000	CDM-97012-S	CDT-97012-S
1100A0801	18-16	0.85-1.25	Brass	None	5000	CDM-97012-M	CDT-97012-M
1100A0802	14-12	2.0-3.0	Brass	None	4000	CDM-97012-L	CDT-97012-L
1101A0800	22-20	0.3-0.5	Brass	Pre-Tin	5000	CDM-97012-S	CDT-97012-S
1101A0801	18-16	0.85-1.25	Brass	Pre-Tin	5000	CDM-97012-M	CDT-97012-M
1101A0802	14-12	2.0-3.0	Brass	Pre-Tin	4000	CDM-97012-L	CDT-97012-L

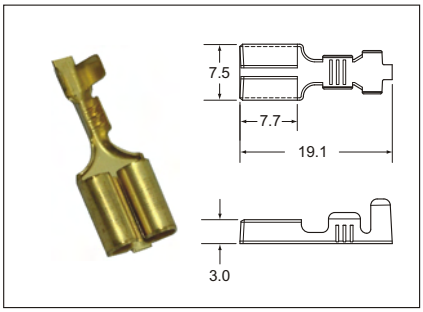

Thickness: 0.3

ITEM NO.	WIRE RANGE		MATERIAL	PLATINGS	Q'TY REEL	APPLICATOR	DIES
	A.W.G.	mm²					
1200A0800	22-20	0.3-0.5	Brass	None	6000	CDM-97013-S	CDT-97013-S
1200A0801	18-16	0.85-1.25	Brass	None	6000	CDM-97013-M	CDT-97013-M
1200A0802	14-12	2.0-3.0	Brass	None	4000	CDM-97013-L	CDT-97013-L
1201A0800	22-20	0.3-0.5	Brass	Pre-Tin	6000	CDM-97013-S	CDT-97013-S
1201A0801	18-16	0.85-1.25	Brass	Pre-Tin	6000	CDM-97013-M	CDT-97013-M
1201A0802	14-12	2.0-3.0	Brass	Pre-Tin	4000	CDM-97013-L	CDT-97013-L

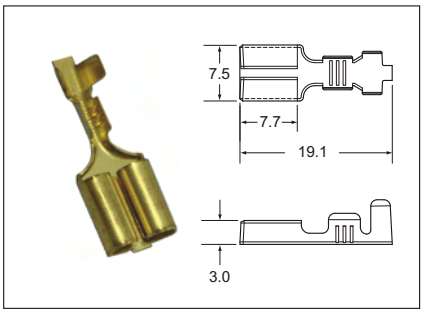

Thickness: 0.32

ITEM NO.	WIRE RANGE		MATERIAL	PLATINGS	Q'TY REEL	APPLICATOR	DIES
	A.W.G.	mm²					
1200A0805	22-20	0.3-0.5	Brass	None	6000	CDM-97013-S	CDT-97013-S
1200A0806	18-16	0.75-1.25	Brass	None	6000	CDM-97013-M	CDT-97013-M
1200A0807	14-12	2.0-3.0	Brass	None	4000	CDM-97013-L	CDT-97013-L
1201A0805	22-20	0.3-0.5	Brass	Pre-Tin	6000	CDM-97013-S	CDT-97013-S
1201A0806	18-16	0.75-1.25	Brass	Pre-Tin	6000	CDM-97013-M	CDT-97013-M
1201A0807	14-12	2.0-3.0	Brass	Pre-Tin	4000	CDM-97013-L	CDT-97013-L

250
STANDARD TYPE
UNSEALED

HOUSING

POLE	MALE	FEMALE
2	**3102A0801**  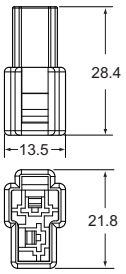 **100 PCS**	**3202A0801**  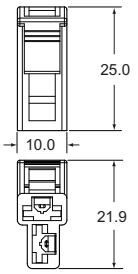 **100 PCS**
3	**3103A0801**  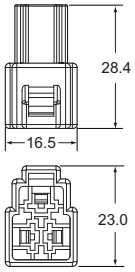 **100 PCS**	**3203A0801**  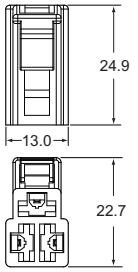 **100 PCS**
4	**3104A0807**  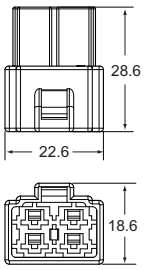 **100 PCS**	**3204A0807**  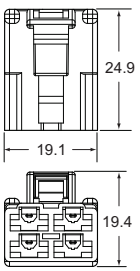 **100 PCS**
6	**3106A0807**  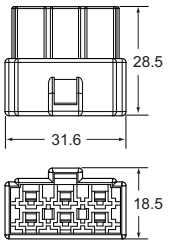 **50 PCS**	**3206A0807**  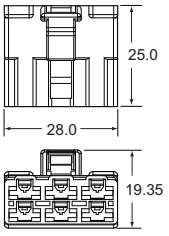 **100 PCS**

• HOUSING (UNIT:mm)
MATERIAL:NY66
COLOR:3102A0801, 3202A0801, 3103A0801, 3203A0801:NATURAL
3104A0807, 3204A0807, 3106A0807, 3206A0807:GREEN

250
RB SERIES
UNSEALED

CONSTRUCTION

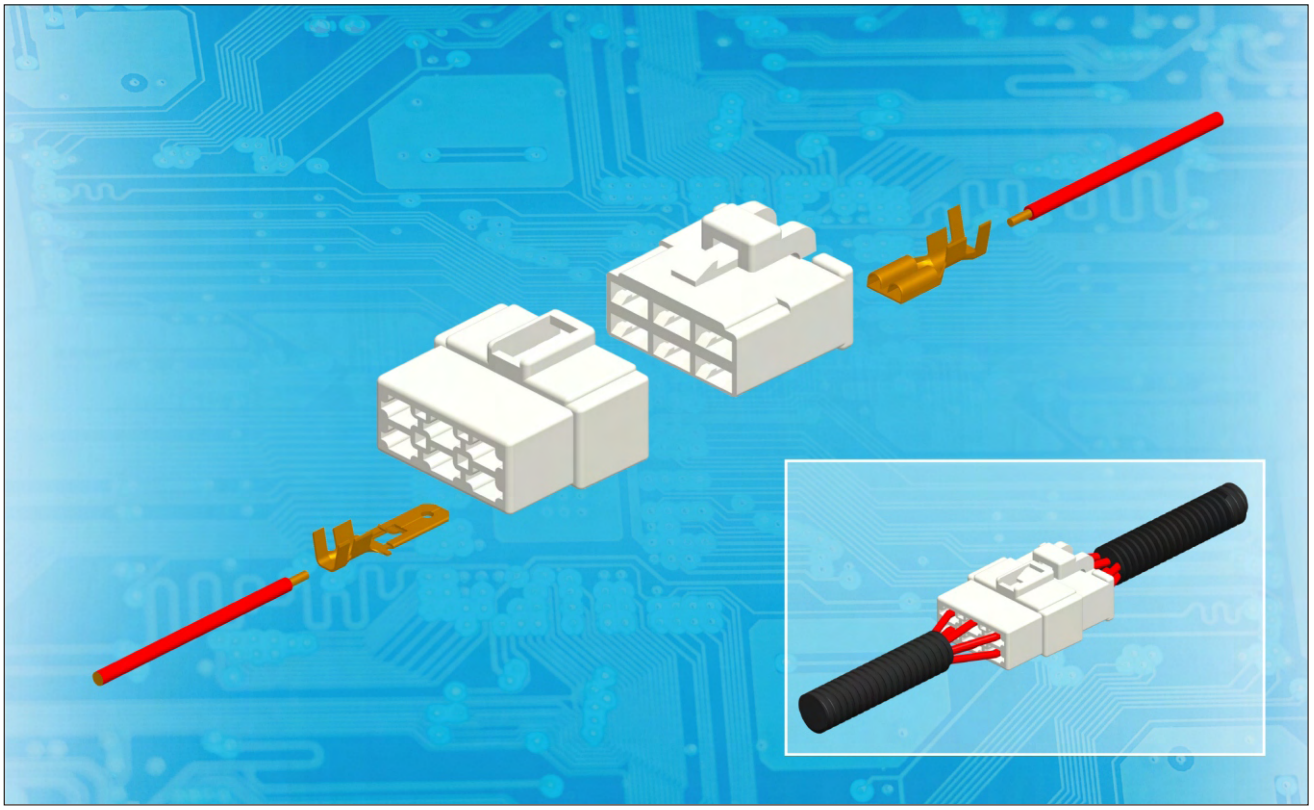

SPECIFICATIONS

Material	Connector	NY66
	Male Terminal	BRASS
	Female Terminal	BRASS
Operating Temperature Range		-40°C~+120°C
Voltage Drop		3mV/A
Isolation Resistance		100MΩ
Dielectric Resistance		1000V
Applicable Wire Size		0.3mm² ~3.0mm² (22 AWG~12 AWG)
Maximum Electric Current		18A

250
RB SERIES
UNSEALED

TERMINAL

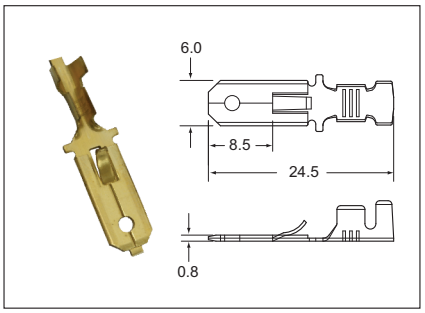

ITEM NO.	WIRE RANGE		MATERIAL	PLATINGS	Q'TY	APPLICATOR	DIES
	A.W.G.	mm^2			REEL		
1100A0430	22-20	0.3-0.5	Brass	None	5000	CDM-97023-S	CDT-97023-S
1100A0431	18-16	0.85-1.25	Brass	None	5000	CDM-97023-M	CDT-97023-M
1100A0432	14-12	2.0-3.0	Brass	None	4000	CDM-97023-L	CDT-97023-L
1101A0430	22-20	0.3-0.5	Brass	Pre-Tin	5000	CDM-97023-S	CDT-97023-S
1101A0431	18-16	0.85-1.25	Brass	Pre-Tin	5000	CDM-97023-M	CDT-97023-M
1101A0432	14-12	2.0-3.0	Brass	Pre-Tin	4000	CDM-97023-L	CDT-97023-L

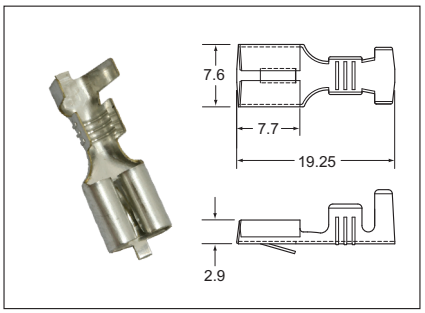

ITEM NO.	WIRE RANGE		MATERIAL	PLATINGS	Q'TY	APPLICATOR	DIES
	A.W.G.	mm^2			REEL		
1200A0430	22-20	0.3-0.5	Brass	None	6000	CDM-97020-S	CDT-97020-S
1200A0431	18-16	0.85-1.25	Brass	None	6000	CDM-97020-M	CDT-97020-M
1200A0432	14-12	2.0-3.0	Brass	None	4000	CDM-97020-L	CDT-97020-L
1201A0430	22-20	0.3-0.5	Brass	Pre-Tin	6000	CDM-97020-S	CDT-97020-S
1201A0431	18-16	0.85-1.25	Brass	Pre-Tin	6000	CDM-97020-M	CDT-97020-M
1201A0432	14-12	2.0-3.0	Brass	Pre-Tin	4000	CDM-97020-L	CDT-97020-L

HOUSING

POLE	MALE	FEMALE
2	**M2250-01NN** 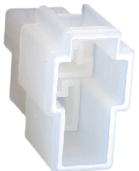 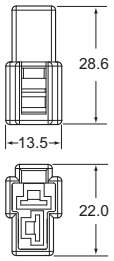 **100 PCS**	**F2250-01NN**  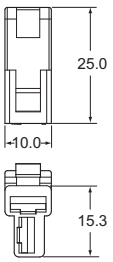 **100 PCS**

- HOUSING (UNIT:mm)
  MATERIAL:NY66
  COLOR:NATURAL

250
RB SERIES
UNSEALED

HOUSING

POLE	MALE	FEMALE
3	**M3250-01NN**  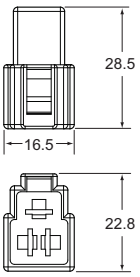 **100 PCS**	**F3250-01NN**  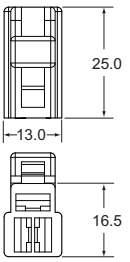 **100 PCS**
4	**M4250-01NN**  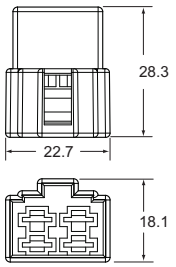 **100 PCS**	**F4250-01NN**  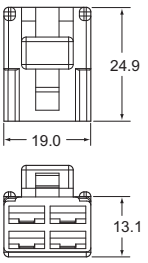 **100 PCS**
6	**M6250-01NN**  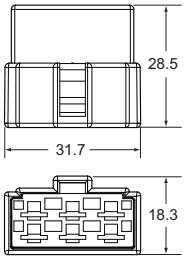 **50 PCS**	**F6250-01NN**  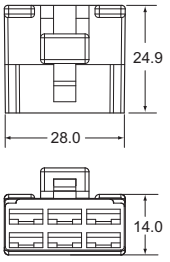 **100 PCS**

• HOUSING (UNIT:mm)
MATERIAL:NY66
COLOR:NATURAL

250 AM FASTIN-FASTON
UNSEALED

CONSTRUCTION

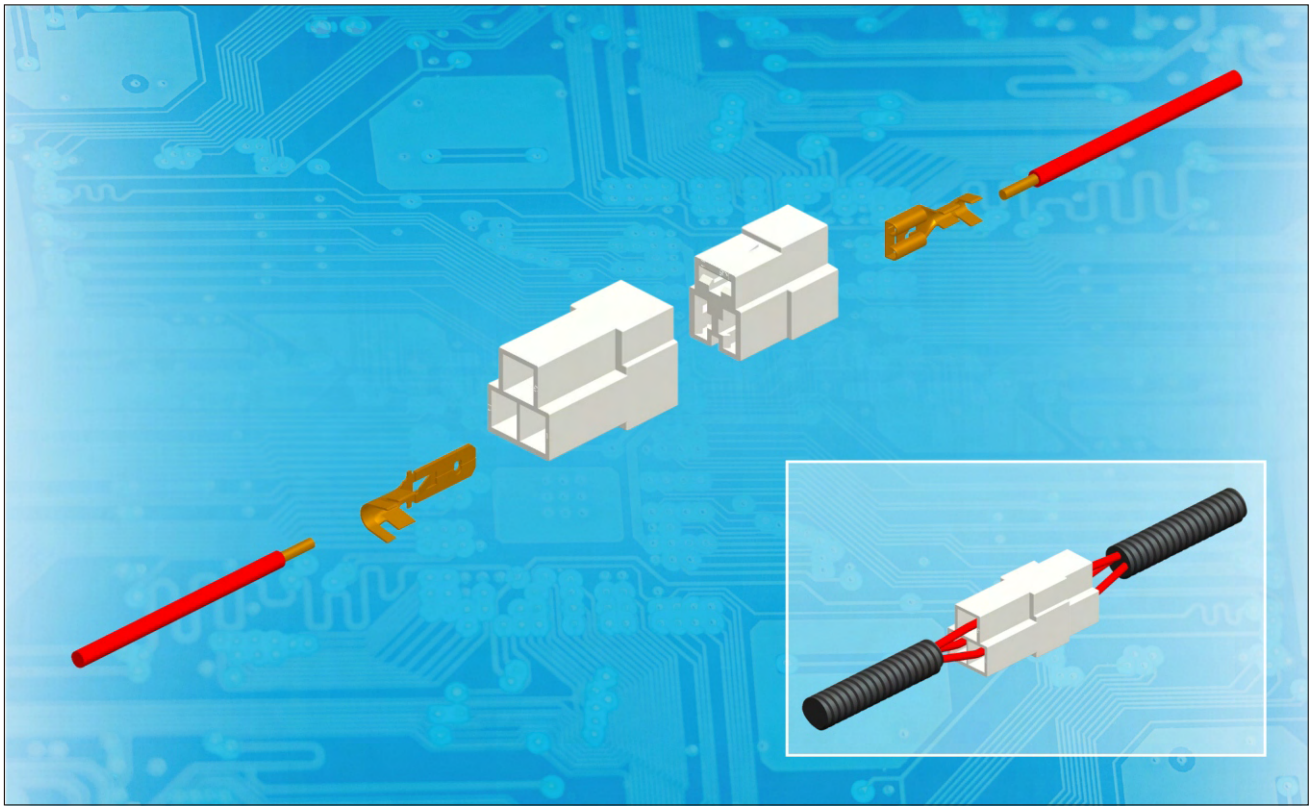

SPECIFICATIONS

Material	Connector	NY66 OR PBT
	Male Terminal	BRASS
	Female Terminal	BRASS
Operating Temperature Range		-30°C~+105°C
Voltage Drop		3mV/A
Isolation Resistance		100MΩ
Dielectric Resistance		1000V
Applicable Wire Size		0.3mm² ~6.0mm² (22 AWG~10 AWG)
Maximum Electric Current		30A

250 AM FASTIN-FASTON
UNSEALED

TERMINAL

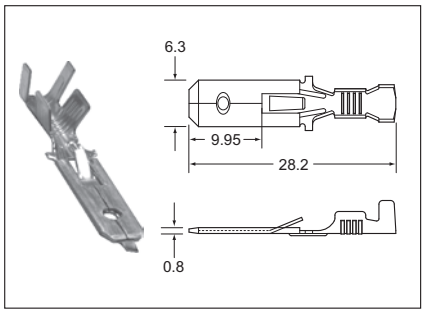

ITEM NO.	WIRE RANGE A.W.G.	WIRE RANGE mm²	MATERIAL	PLATINGS	Q'TY REEL	APPLICATOR	DIES
MJ250-02B2	12-10	4.0-6.0	Brass	Tin	2500	CDM-94005-L	CDT-94005-L
◎MJ250-02BT	12-10	4.0-6.0	Brass	Pre-Tin	2500	CDM-94005-L	CDT-94005-L
◎ML250-02B2	18-14	0.8-2.5	Brass	Tin	5000	CDM-94005-L	CDT-94005-L
ML250-02B9	18-14	0.8-2.5	Brass	None	2500	CDM-94005-L	CDT-94005-L
◎ML250-02BT	18-14	0.8-2.5	Brass	Pre-Tin	2500	CDM-94005-L	CDT-94005-L

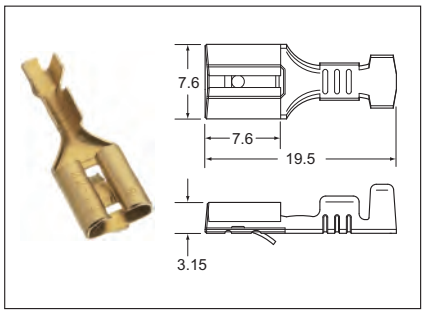

ITEM NO.	WIRE RANGE A.W.G.	WIRE RANGE mm²	MATERIAL	PLATINGS	Q'TY REEL	APPLICATOR	DIES
FM250-08B98	22-20	0.3-0.5	Brass	None	5000	CDM-94002-S	CDT-94002-S
FL250-08B98	18-14	0.8-2.0	Brass	None	5000	CDM-94003-M	CDT-94003-M
FJ250-08B98	14-12	2.0-3.0	Brass	None	5000	CDM-94004-L	CDT-94004-L

ALL LISTED
◎: NOT RU AND C-RU LISTED

HOUSING

POLE	MALE	FEMALE
3	**3103Z0021**  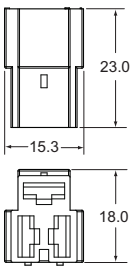 **100 PCS**	**3203Z0021**  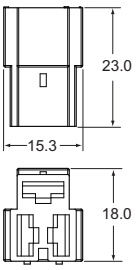 **100 PCS**

• HOUSING (UNIT:mm)
MATERIAL:NY66
COLOR:NATURAL

ALL LISTED

250 AM FASTIN-FASTON
UNSEALED

TERMINAL

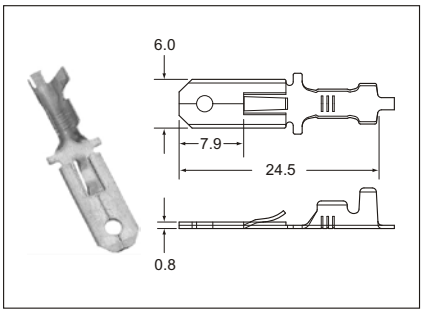

ITEM NO.	WIRE RANGE A.W.G.	WIRE RANGE mm²	MATERIAL	PLATINGS	Q'TY REEL	APPLICATOR	DIES
◎MM250-01B2	20-16	0.5-1.4	Brass	Tin	5000	CDM-93019-M	CDT-93019-M
◎MM250-01B9	20-16	0.5-1.4	Brass	None	5000	CDM-93019-M	CDT-93019-M
MM250-01BT	20-16	0.5-1.4	Brass	Pre-Tin	5000	CDM-93019-M	CDT-93019-M

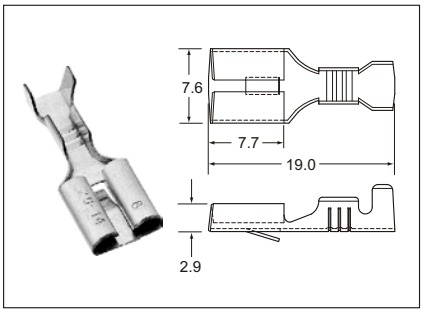

ITEM NO.	WIRE RANGE A.W.G.	WIRE RANGE mm²	MATERIAL	PLATINGS	Q'TY REEL	APPLICATOR	DIES
FM250-04B28	22-16	0.3-1.4	Brass	Tin	5000	CDM-93016-M	CDT-93016-M
FM250-04B98	22-16	0.3-1.4	Brass	None	5000	CDM-93016-M	CDT-93016-M
FM250-04BT8	22-16	0.3-1.4	Brass	Pre-Tin	5000	CDM-93016-M	CDT-93016-M

ALL LISTED
◎: NOT RU AND C-RU LISTED

HOUSING

POLE	MALE	FEMALE
2	**M2250-03NK** 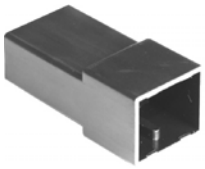 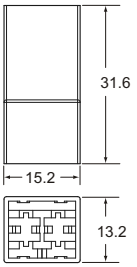 **100 PCS**	**F2250-10NK**  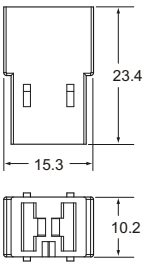 **100 PCS**

• HOUSING (UNIT:mm)
MATERIAL:PBT
COLOR:BLACK

250 KST
UNSEALED

CONSTRUCTION

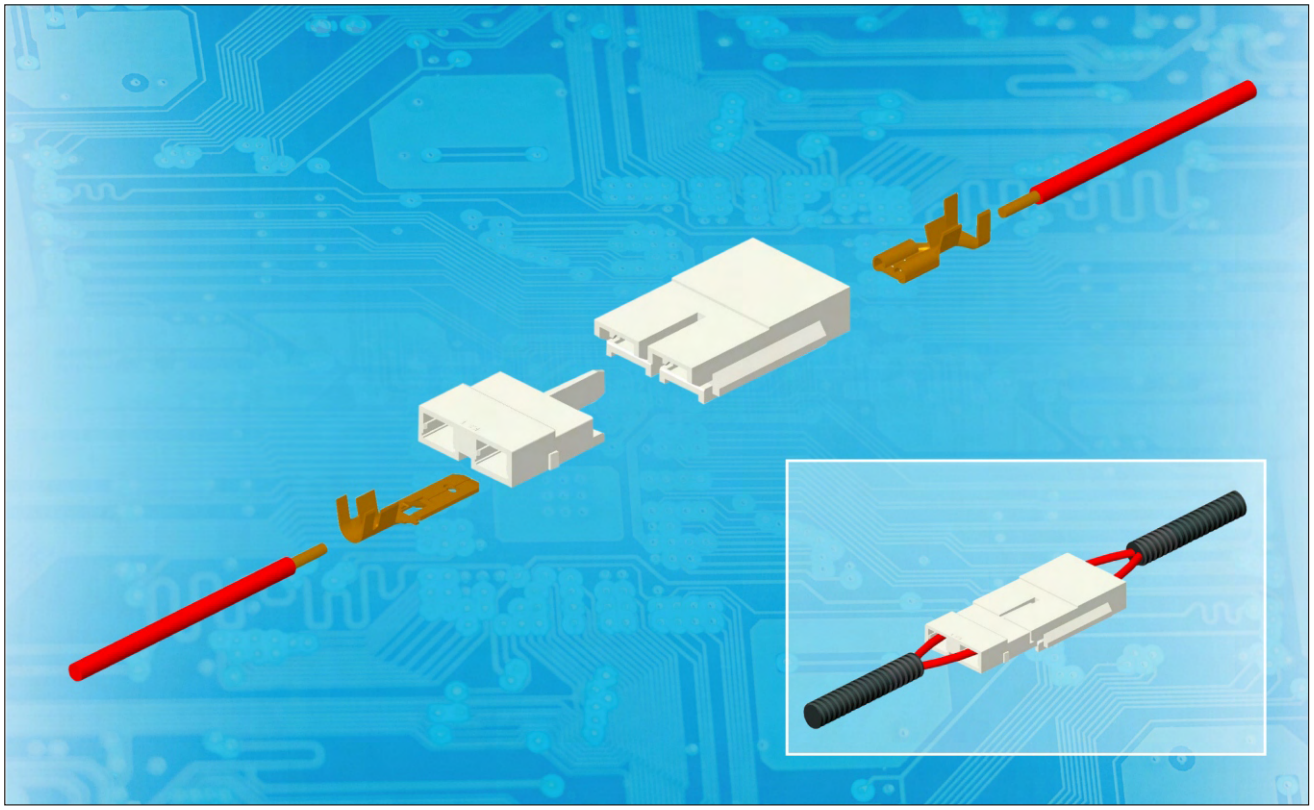

SPECIFICATIONS

Material	Connector	NY66
	Male Terminal	BRASS
	Female Terminal	BRASS
Operating Temperature Range		-30°C~+105°C
Voltage Drop		3mV/A
Isolation Resistance		100MΩ
Dielectric Resistance		1000V
Applicable Wire Size		2.0mm² ~6.0mm² (14 AWG~8 AWG)
Maximum Electric Current		30A

250 KST
UNSEALED

TERMINAL

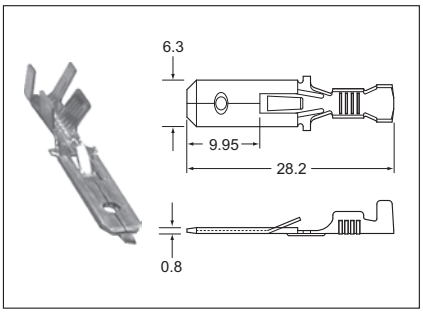

ITEM NO.	WIRE RANGE A.W.G.	WIRE RANGE mm²	MATERIAL	PLATINGS	Q'TY REEL	APPLICATOR	DIES
MJ250-02B2	12-10	4.0-6.0	Brass	Tin	2500	CDM-94005-L	CDT-94005-L
◎MJ250-02BT	12-10	4.0-6.0	Brass	Pre-Tin	2500	CDM-94005-L	CDT-94005-L
◎ML250-02B2	18-14	0.8-2.5	Brass	Tin	5000	CDM-94005-L	CDT-94005-L
ML250-02B9	18-14	0.8-2.5	Brass	None	2500	CDM-94005-L	CDT-94005-L
◎ML250-02BT	18-14	0.8-2.5	Brass	Pre-Tin	2500	CDM-94005-L	CDT-94005-L

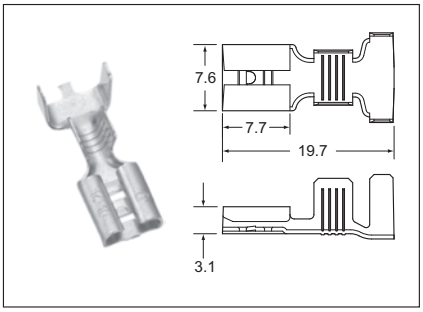

ITEM NO.	WIRE RANGE A.W.G.	WIRE RANGE mm²	MATERIAL	PLATINGS	Q'TY REEL	APPLICATOR	DIES
FJ250-06B28	14-10	2.0-6.0	Brass	Tin	4000	CDM-93040-L	CDT-93040-L
FJ250-06B98	14-10	2.0-6.0	Brass	None	4000	CDM-93040-L	CDT-93040-L
FJ250-06BT8	14-10	2.0-6.0	Brass	Pre-Tin	4000	CDM-93040-L	CDT-93040-L
FQ250-06B28	12-8	3.0-8.0	Brass	Tin	4000	CDM-94011-L	CDT-94011-L
FQ250-06B98	12-8	3.0-8.0	Brass	None	4000	CDM-94011-L	CDT-94011-L
FQ250-06BT8	12-8	3.0-8.0	Brass	Pre-Tin	4000	CDM-94011-L	CDT-94011-L

ALL LISTED
◎: NOT UL AND C-UL LISTED

HOUSING

POLE	MALE	FEMALE
2	3102Z0031  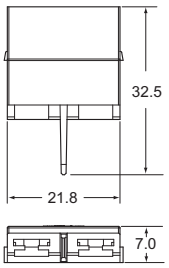 100 PCS	3202Z0031  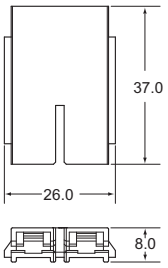 100 PCS

• HOUSING (UNIT:mm)
MATERIAL:NY66
COLOR:NATURAL

ALL LISTED

250
EV SERIES
UNSEALED

SPECIFICATIONS

Material	Connector	NY66 OR TRR
	Male Terminal	BRASS
	Female Terminal	BRASS
Operating Temperature Range		-40°C~+120°C
Voltage Drop		3mV/A
Isolation Resistance		100MΩ
Dielectric Resistance		1000V
Applicable Wire Size		0.3mm² ~3.0mm² (22 AWG~12 AWG)
Maximum Electric Current		20A

250
EV SERIES
UNSEALED

TERMINAL

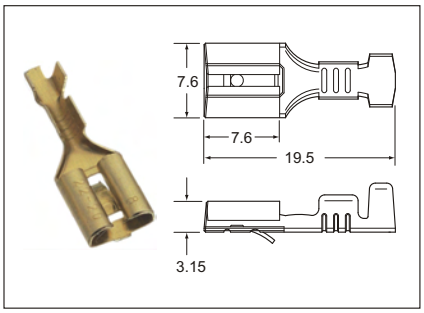

ITEM NO.	WIRE RANGE		MATERIAL	PLATINGS	Q'TY	APPLICATOR	DIES
	A.W.G.	mm^2			REEL		
FM250-08B98	22-20	0.3-0.5	Brass	None	5000	CDM-94002-S	CDT-94002-S
FL250-08B98	18-14	0.8-2.0	Brass	None	5000	CDM-94003-M	CDT-94003-M
FJ250-08B98	14-12	2.0-3.0	Brass	None	4000	CDM-94004-L	CDT-94004-L

HOUSING

POLE	FEMALE	COUPLER COVER
4	**3204A0692**  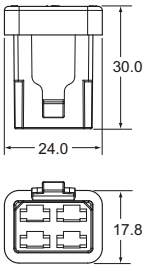 **100 PCS**	**8204A0692** 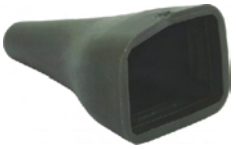 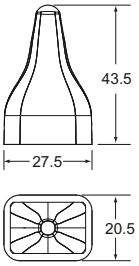 **100 PCS**

- HOUSING (UNIT:mm)
  MATERIAL:HOUSING:NY66
  COUPLER COVER:TRR
  COLOR:BLACK

250 AM
POSITIVE LOCK
UNSEALED

SPECIFICATIONS

Material	Connector	NY66
	Male Terminal	-
	Female Terminal	BRASS
Operating Temperature Range		-40°C~+105°C
Voltage Drop		10mV/A
Isolation Resistance		100MΩ
Dielectric Resistance		1000V
Applicable Wire Size		0.5mm² ~6.0mm² (20 AWG~10 AWG)
Maximum Electric Current		30A

250 AM POSITIVE LOCK
UNSEALED

TERMINAL

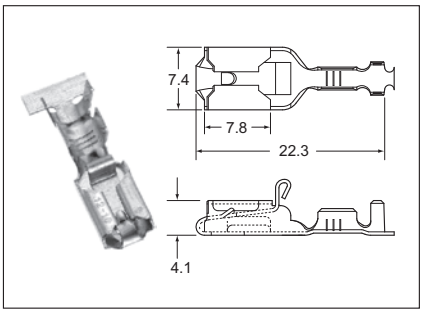

ALL LISTED
◎: NOT UL AND C-UL LISTED

ITEM NO.	WIRE RANGE A.W.G.	WIRE RANGE mm²	MATERIAL	PLATINGS	Q'TY REEL	APPLICATOR	DIES
FM250-05B28	20-18	0.5-0.8	Brass	Tin	1200	CDM-93024-M	CDT-93024-M
◎FM250-05B28F	20-18	0.5-0.8	Brass	Tin	1200	CDM-93024-M	CDT-93024-M
FM250-05B98	20-18	0.5-0.8	Brass	None	1200	CDM-93024-M	CDT-93024-M
FM250-05BT8	20-18	0.5-0.8	Brass	Pre-Tin	1200	CDM-93024-M	CDT-93024-M
FL250-05B28	18-14	0.8-2.0	Brass	Tin	1200	CDM-93045-L	CDT-93045-L
◎FL250-05B28F	18-14	0.8-2.0	Brass	Tin	1200	CDM-93045-L	CDT-93045-L
FL250-05B98	18-14	0.8-2.0	Brass	None	1200	CDM-93045-L	CDT-93045-L
FL250-05BT8	18-14	0.8-2.0	Brass	Pre-Tin	1200	CDM-93045-L	CDT-93045-L
FJ250-05B28	12-10	3.0-6.0	Brass	Tin	1200	CDM-93029-L	CDT-93029-L
◎FJ250-05B28F	12-10	3.0-6.0	Brass	Tin	1200	CDM-93029-L	CDT-93029-L
FJ250-05B98	12-10	3.0-6.0	Brass	None	1200	CDM-93029-L	CDT-93029-L
FJ250-05BT8	12-10	3.0-6.0	Brass	Pre-Tin	1200	CDM-93029-L	CDT-93029-L

HOUSING

POLE		FEMALE
2		**F1250-02NK**  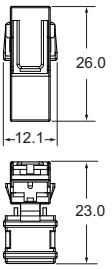 **100 PCS**
2		**F1250-03NK**  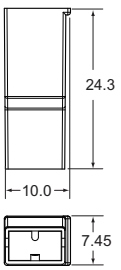 **500 PCS**

• HOUSING (UNIT:mm)
MATERIAL:NY66
COLOR:BLACK

ALL LISTED

250 DF
56 SERIES
UNSEALED

SPECIFICATIONS

Material	Connector	PP
	Male Terminal	BRASS
	Female Terminal	-
Operating Temperature Range		-40°C~+125°C
Voltage Drop		3mV/A
Isolation Resistance		100MΩ
Dielectric Resistance		1000V
Applicable Wire Size		0.5mm^2 ~0.85mm^2 (20 AWG~18 AWG)
Maximum Electric Current		10A

250 DF
56 SERIES
UNSEALED

TERMINAL

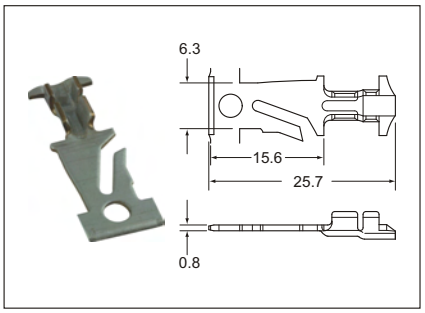

ITEM NO.	WIRE RANGE		MATERIAL	PLATINGS	Q'TY	APPLICATOR	DIES
	A.W.G.	mm^2			REEL		
1101A0271	20-18	0.5-0.85	Brass	Pre-Tin	5000	CDM-95026-M	CDT-95026-M

HOUSING

POLE	MALE	
2	**3102A0272**  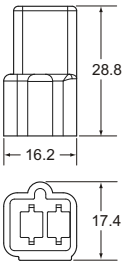 **100 PCS**	

- HOUSING (UNIT:mm)
  MATERIAL:PP
  COLOR:BLACK

250 DF
56 SERIES
UNSEALED

SPECIFICATIONS

Material	Connector	PP
	Male Terminal	-
	Female Terminal	BRASS
Operating Temperature Range		-40°C~+125°C
Voltage Drop		3mV/A
Isolation Resistance		100MΩ
Dielectric Resistance		1000V
Applicable Wire Size		0.5mm^2 ~0.85mm^2 (20 AWG~18 AWG)
Maximum Electric Current		10A

250 DF
56 SERIES
UNSEALED

TERMINAL

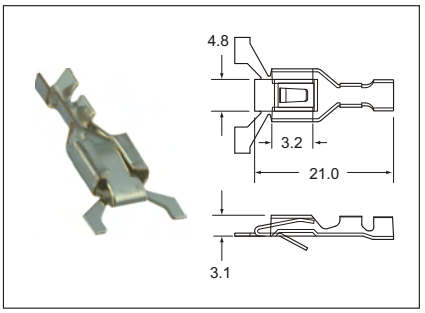

ITEM NO.	WIRE RANGE		MATERIAL	PLATINGS	Q'TY	APPLICATOR	DIES
	A.W.G.	mm^2			REEL		
1201A0261	20-18	0.5-0.85	Brass	Pre-Tin	2500	CDM-95025-M	CDT-95025-M

HOUSING

POLE		FEMALE
2		**3202A0262** 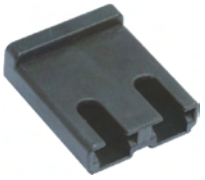 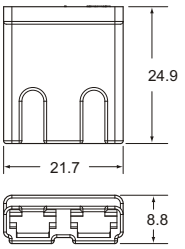 **100 PCS**

- HOUSING (UNIT:mm)
  MATERIAL:PP
  COLOR:BLACK

250 SERIES
UNSEALED

SPECIFICATIONS

Material	Connector	PBT
	Male Terminal	-
	Female Terminal	BRASS
Operating Temperature Range		-40°C~+120°C
Voltage Drop		3mV/A
Isolation Resistance		100MΩ
Dielectric Resistance		1000V
Applicable Wire Size		0.3mm^2 ~3.0mm^2 (22 AWG~12 AWG)
Maximum Electric Current		25A

250 SERIES
UNSEALED

TERMINAL

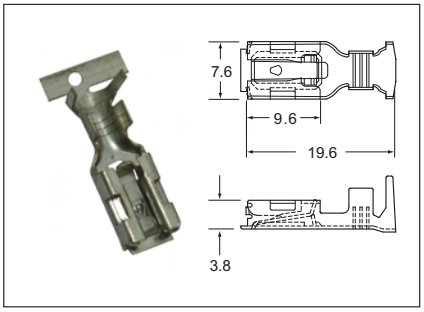

ITEM NO.	WIRE RANGE		MATERIAL	PLATINGS	Q'TY	APPLICATOR	DIES
	A.W.G.	mm^2			REEL		
1200A0790	22-20	0.3-0.5	Brass	None	2500	CDM-97011-S	CDT-97011-S
1200A0791	18-16	0.85-1.25	Brass	None	1500	CDM-97011-M	CDT-97011-M
1200A0792	14-12	2.0-3.0	Brass	None	1000	CDM-97011-L	CDT-97011-L
1201A0790	22-20	0.3-0.5	Brass	Pre-Tin	2500	CDM-97011-S	CDT-97011-S
1201A0791	18-16	0.85-1.25	Brass	Pre-Tin	1500	CDM-97011-M	CDT-97011-M
1201A0792	14-12	2.0-3.0	Brass	Pre-Tin	1000	CDM-97011-L	CDT-97011-L

HOUSING

POLE		FEMALE
1		**3201A0792**  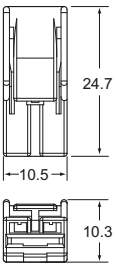 **100 PCS**

- HOUSING (UNIT:mm)
  MATERIAL:PBT
  COLOR:BLACK

250 SERIES
UNSEALED

SPECIFICATIONS

Material	Connector	NY66 OR PE
	Male Terminal	-
	Female Terminal	BRASS
Operating Temperature Range		-40°C~+120°C
Voltage Drop		3mV/A
Isolation Resistance		100MΩ
Dielectric Resistance		1000V
Applicable Wire Size		0.5mm^2 ~6.0mm^2 (20 AWG~10 AWG)
Maximum Electric Current		40A

250 SERIES
UNSEALED

TERMINAL

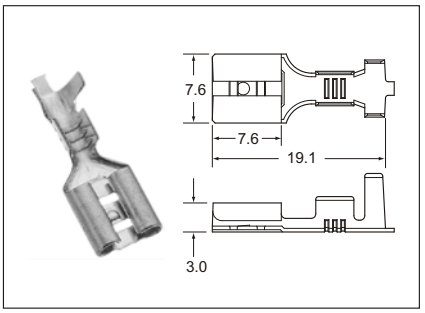

ITEM NO.	WIRE RANGE A.W.G.	WIRE RANGE mm²	MATERIAL	PLATINGS	Q'TY REEL	APPLICATOR	DIES
FL250-01B28	20-14	0.5-2.0	Brass	Tin	5000	CDM-93015-L	CDT-93015-L
FL250-01B98	20-14	0.5-2.0	Brass	None	5000	CDM-93015-L	CDT-93015-L
FL250-01BT8	20-14	0.5-2.0	Brass	Pre-Tin	5000	CDM-93015-L	CDT-93015-L
◎FJ250-01B28	12-10	3.0-6.0	Brass	Tin	3000	CDM-98010-J	CDT-98010-J
◎FJ250-01B98	12-10	3.0-6.0	Brass	None	3000	CDM-98010-J	CDT-98010-J
◎FJ250-01BT8	12-10	3.0-6.0	Brass	Pre-Tin	6000	CDM-98010-J	CDT-98010-J

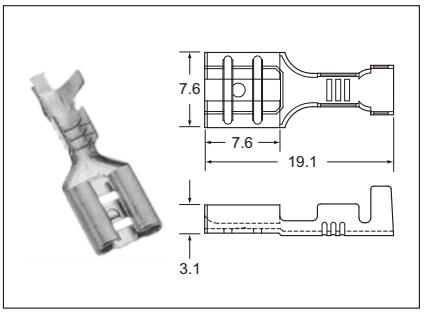

ITEM NO.	WIRE RANGE A.W.G.	WIRE RANGE mm²	MATERIAL	PLATINGS	Q'TY REEL	APPLICATOR	DIES
FL250-02B28	20-14	0.5-2.0	Brass	Tin	5000	CDM-93015-L	CDT-93015-L
FL250-02B98	20-14	0.5-2.0	Brass	None	5000	CDM-93015-L	CDT-93015-L
FL250-02BT8	20-14	0.5-2.0	Brass	Pre-Tin	5000	CDM-93015-L	CDT-93015-L
◎FJ250-02B28	12-10	3.0-6.0	Brass	Tin	3000	CDM-98011-J	CDT-98011-J
◎FJ250-02B98	12-10	3.0-6.0	Brass	None	3000	CDM-98011-J	CDT-98011-J
◎FJ250-02BT8	12-10	3.0-6.0	Brass	Pre-Tin	3000	CDM-98011-J	CDT-98011-J

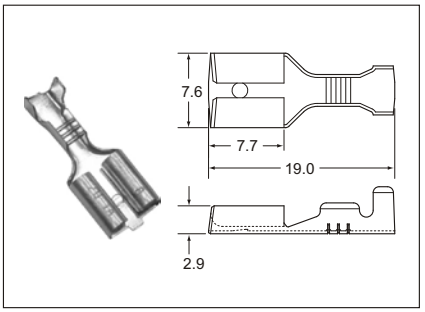

ITEM NO.	WIRE RANGE A.W.G.	WIRE RANGE mm²	MATERIAL	PLATINGS	Q'TY REEL	APPLICATOR	DIES
FL250-03B28	20-14	0.5-2.0	Brass	Tin	5000	CDM-93038-L	CDT-93038-L
FL250-03B98	20-14	0.5-2.0	Brass	None	5000	CDM-93038-L	CDT-93038-L
FL250-03BT8	20-14	0.5-2.0	Brass	Pre-Tin	5000	CDM-93038-L	CDT-93038-L

ALL LISTED
◎: NOT UL AND C-UL LISTED

HOUSING

POLE		FEMALE
1		**F1250-07PN**  **500 PCS** 

• HOUSING (UNIT:mm)
MATERIAL:NY66
COLOR:WHITE

250 SERIES
UNSEALED

TERMINAL

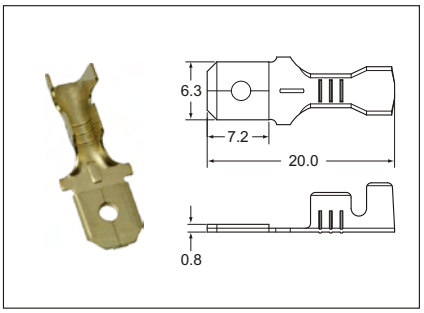

ITEM NO.	WIRE RANGE A.W.G.	WIRE RANGE mm²	MATERIAL	PLATINGS	Q'TY REEL	APPLICATOR	DIES
501LR	16-14	1.5-2.5	Brass	None	1000		
501LT	16-14	1.5-2.5	Brass	Tin	1000		

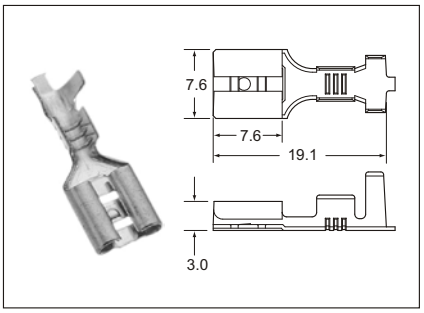

ITEM NO.	WIRE RANGE A.W.G.	WIRE RANGE mm²	MATERIAL	PLATINGS	Q'TY REEL	APPLICATOR	DIES
FL250-01B28	20-14	0.5-2.0	Brass	Tin	5000	CDM-93015-L	CDT-93015-L
FL250-01B98	20-14	0.5-2.0	Brass	None	5000	CDM-93015-L	CDT-93015-L
FL250-01BT8	20-14	0.5-2.0	Brass	Pre-Tin	5000	CDM-93015-L	CDT-93015-L
◎FJ250-01B28	12-10	3.0-6.0	Brass	Tin	3000	CDM-98010-J	CDT-98010-J
◎FJ250-01B98	12-10	3.0-6.0	Brass	None	3000	CDM-98010-J	CDT-98010-J
◎FJ250-01BT8	12-10	3.0-6.0	Brass	Pre-Tin	6000	CDM-98010-J	CDT-98010-J

ALL LISTED
◎: NOT UL AND C-UL LISTED

HOUSING

POLE	MALE	FEMALE
1	**M1250-02EN** 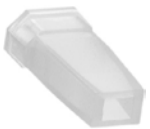 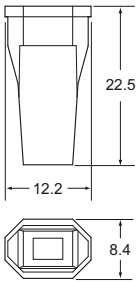 **500 PCS**	**F1250-08EN**  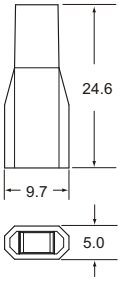 **500 PCS**

• HOUSING (UNIT:mm)
MATERIAL:PE
COLOR:NATURAL

250 SERIES
UNSEALED

SPECIFICATIONS

Material	Connector	NY66
	Male Terminal	-
	Female Terminal	BRASS
Operating Temperature Range		-40°C~+120°C
Voltage Drop		3mV/A
Isolation Resistance		100MΩ
Dielectric Resistance		1000V
Applicable Wire Size		0.5mm² ~6.0mm² (20 AWG~10 AWG)
Maximum Electric Current		40A

250 SERIES
UNSEALED

TERMINAL

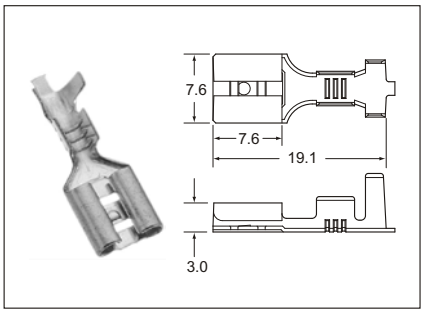

ITEM NO.	WIRE RANGE A.W.G.	WIRE RANGE mm²	MATERIAL	PLATINGS	Q'TY REEL	APPLICATOR	DIES
FL250-01B28	20-14	0.5-2.0	Brass	Tin	5000	CDM-93015-L	CDT-93015-L
FL250-01B98	20-14	0.5-2.0	Brass	None	5000	CDM-93015-L	CDT-93015-L
FL250-01BT8	20-14	0.5-2.0	Brass	Pre-Tin	5000	CDM-93015-L	CDT-93015-L
◎FJ250-01B28	12-10	3.0-6.0	Brass	Tin	3000	CDM-98010-J	CDT-98010-J
◎FJ250-01B98	12-10	3.0-6.0	Brass	None	3000	CDM-98010-J	CDT-98010-J
◎FJ250-01BT8	12-10	3.0-6.0	Brass	Pre-Tin	6000	CDM-98010-J	CDT-98010-J

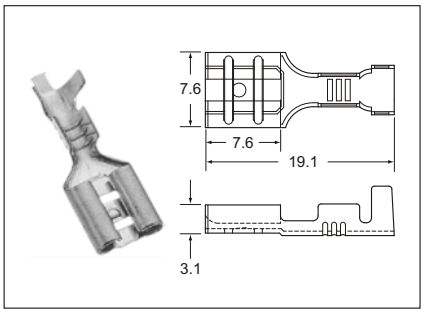

ITEM NO.	WIRE RANGE A.W.G.	WIRE RANGE mm²	MATERIAL	PLATINGS	Q'TY REEL	APPLICATOR	DIES
FL250-02B28	20-14	0.5-2.0	Brass	Tin	5000	CDM-93015-L	CDT-93015-L
FL250-02B98	20-14	0.5-2.0	Brass	None	5000	CDM-93015-L	CDT-93015-L
FL250-02BT8	20-14	0.5-2.0	Brass	Pre-Tin	5000	CDM-93015-L	CDT-93015-L
◎FJ250-02B28	12-10	3.0-6.0	Brass	Tin	3000	CDM-98011-J	CDT-98011-J
◎FJ250-02B98	12-10	3.0-6.0	Brass	None	3000	CDM-98011-J	CDT-98011-J
◎FJ250-02BT8	12-10	3.0-6.0	Brass	Pre-Tin	3000	CDM-98011-J	CDT-98011-J

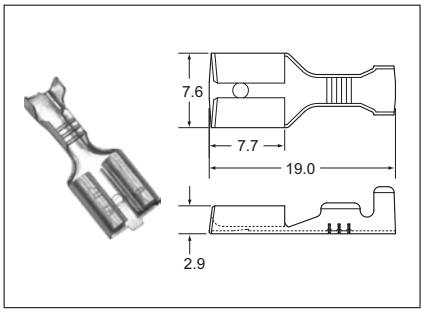

ITEM NO.	WIRE RANGE A.W.G.	WIRE RANGE mm²	MATERIAL	PLATINGS	Q'TY REEL	APPLICATOR	DIES
FL250-03B28	20-14	0.5-2.0	Brass	Tin	5000	CDM-93038-L	CDT-93038-L
FL250-03B98	20-14	0.5-2.0	Brass	None	5000	CDM-93038-L	CDT-93038-L
FL250-03BT8	20-14	0.5-2.0	Brass	Pre-Tin	5000	CDM-93038-L	CDT-93038-L

HOUSING

POLE		FEMALE
1		**F1250-05NN**  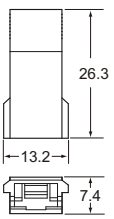 **500 PCS**

• HOUSING (UNIT:mm)
MATERIAL:NY66
COLOR:NATURAL

ALL LISTED
◎: NOT UL AND C-UL LISTED

250 SERIES
UNSEALED

SPECIFICATIONS

Material	Connector	NY66
	Male Terminal	-
	Female Terminal	BRASS
Operating Temperature Range		-40°C~+120°C
Voltage Drop		3mV/A
Isolation Resistance		100MΩ
Dielectric Resistance		1000V
Applicable Wire Size		0.5mm² ~6.0mm² (20 AWG~10 AWG)
Maximum Electric Current		40A

250 SERIES
UNSEALED

TERMINAL

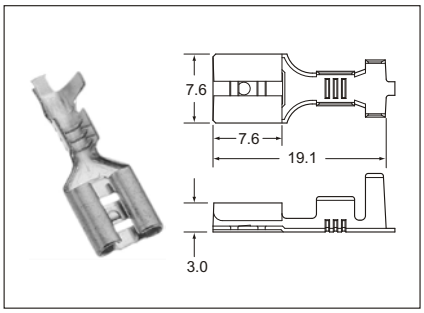

ITEM NO.	WIRE RANGE A.W.G.	WIRE RANGE mm²	MATERIAL	PLATINGS	Q'TY REEL	APPLICATOR	DIES
FL250-01B28	20-14	0.5-2.0	Brass	Tin	5000	CDM-93015-L	CDT-93015-L
FL250-01B98	20-14	0.5-2.0	Brass	None	5000	CDM-93015-L	CDT-93015-L
FL250-01BT8	20-14	0.5-2.0	Brass	Pre-Tin	5000	CDM-93015-L	CDT-93015-L
◎FJ250-01B28	12-10	3.0-6.0	Brass	Tin	3000	CDM-98010-J	CDT-98010-J
◎FJ250-01B98	12-10	3.0-6.0	Brass	None	3000	CDM-98010-J	CDT-98010-J
◎FJ250-01BT8	12-10	3.0-6.0	Brass	Pre-Tin	6000	CDM-98010-J	CDT-98010-J

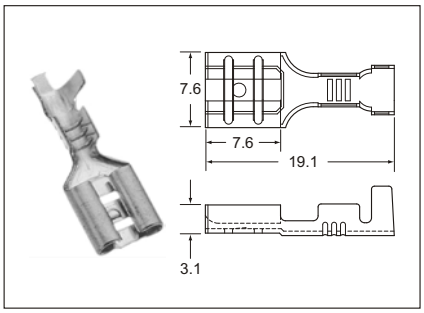

ITEM NO.	WIRE RANGE A.W.G.	WIRE RANGE mm²	MATERIAL	PLATINGS	Q'TY REEL	APPLICATOR	DIES
FL250-02B28	20-14	0.5-2.0	Brass	Tin	5000	CDM-93015-L	CDT-93015-L
FL250-02B98	20-14	0.5-2.0	Brass	None	5000	CDM-93015-L	CDT-93015-L
FL250-02BT8	20-14	0.5-2.0	Brass	Pre-Tin	5000	CDM-93015-L	CDT-93015-L
◎FJ250-02B28	12-10	3.0-6.0	Brass	Tin	3000	CDM-98011-J	CDT-98011-J
◎FJ250-02B98	12-10	3.0-6.0	Brass	None	3000	CDM-98011-J	CDT-98011-J
◎FJ250-02BT8	12-10	3.0-6.0	Brass	Pre-Tin	3000	CDM-98011-J	CDT-98011-J

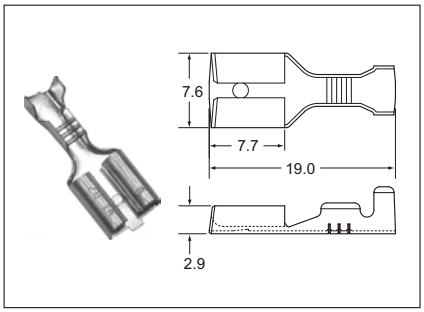

ITEM NO.	WIRE RANGE A.W.G.	WIRE RANGE mm²	MATERIAL	PLATINGS	Q'TY REEL	APPLICATOR	DIES
FL250-03B28	20-14	0.5-2.0	Brass	Tin	5000	CDM-93038-L	CDT-93038-L
FL250-03B98	20-14	0.5-2.0	Brass	None	5000	CDM-93038-L	CDT-93038-L
FL250-03BT8	20-14	0.5-2.0	Brass	Pre-Tin	5000	CDM-93038-L	CDT-93038-L

ALL LISTED
◎: NOT UL AND C-UL LISTED

HOUSING

POLE		FEMALE
1		**F1250-09NN** 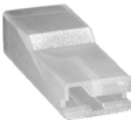 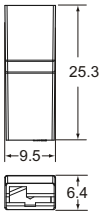 **500 PCS**

• HOUSING (UNIT:mm)
MATERIAL:NY66
COLOR:NATURAL

250 SERIES TERMINALS

SPECIFICATIONS

Material	Connector	-
	Male Terminal	BRASS
	Female Terminal	BRASS OR COPPER ALLOY
Operating Temperature Range		-40°C~+120°C
Voltage Drop		3mV/A
Isolation Resistance		-
Dielectric Resistance		-
Applicable Wire Size		0.3mm^2 ~3.0mm^2 (22 AWG~12 AWG)
Maximum Electric Current		30A

250 SERIES TERMINALS

TERMINAL

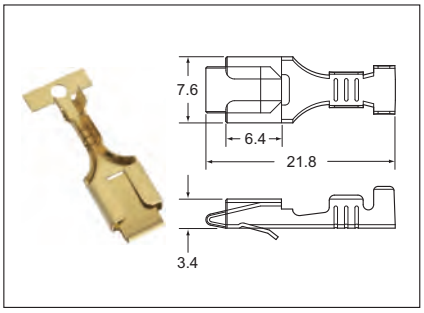

ITEM NO.	WIRE RANGE A.W.G.	WIRE RANGE mm²	MATERIAL	PLATINGS	Q'TY REEL	APPLICATOR	DIES
FM250-07B98	22-18	0.3-0.8	Brass	None	2500	CDM-93050-M	CDT-93050-M
FL250-07B98	18-14	0.8-2.0	Brass	None	2000	CDM-93048-L	CDT-93048-L
FJ250-07B98	14-12	2.0-3.0	Brass	None	2000	CDM-93051-J	CDT-93051-J

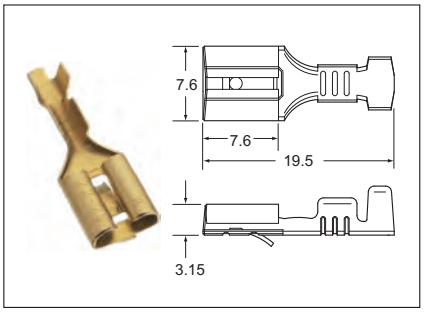

ITEM NO.	WIRE RANGE A.W.G.	WIRE RANGE mm²	MATERIAL	PLATINGS	Q'TY REEL	APPLICATOR	DIES
FM250-08B98	22-20	0.3-0.5	Brass	None	5000	CDM-94002-M	CDT-94002-M
FL250-08B98	18-14	0.8-2.0	Brass	None	5000	CDM-94003-L	CDT-94003-L
FJ250-08B98	14-12	2.0-3.0	Brass	None	5000	CDM-94004-J	CDT-94004-J

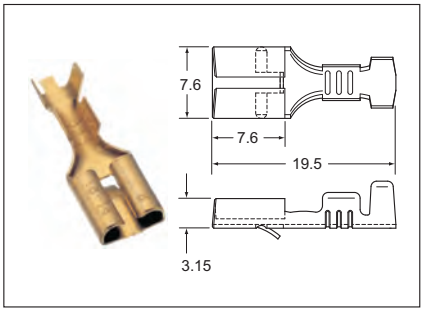

ITEM NO.	WIRE RANGE A.W.G.	WIRE RANGE mm²	MATERIAL	PLATINGS	Q'TY REEL	APPLICATOR	DIES
FM250-09B98	22-20	0.3-0.5	Brass	None	5000	CDM-94010-M	CDT-94010-M
FL250-09B98	18-14	0.8-2.0	Brass	None	5000	CDM-94009-L	CDT-94009-L
FJ250-09B98	14-12	2.0-3.0	Brass	None	5000	CDM-94008-J	CDT-94008-J

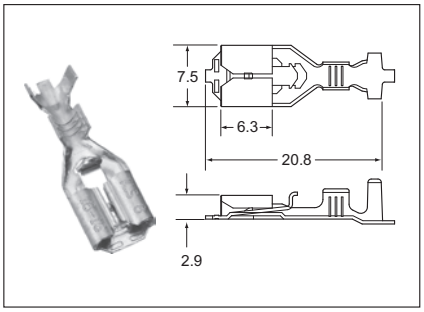

ITEM NO.	WIRE RANGE A.W.G.	WIRE RANGE mm²	MATERIAL	PLATINGS	Q'TY REEL	APPLICATOR	DIES
FL250-10BT8	18-14	0.8-2.0	Brass	Pre-Tin	4000	CDM-95016-L	CDT-95016-L

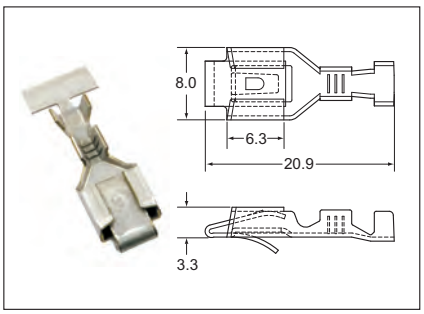

ITEM NO.	WIRE RANGE A.W.G.	WIRE RANGE mm²	MATERIAL	PLATINGS	Q'TY REEL	APPLICATOR	DIES
FM250-11BT8	20-18	0.5-0.8	Brass	Pre-Tin	2000	CDM-98012-M	CDT-98012-M

250 SERIES TERMINALS

TERMINAL

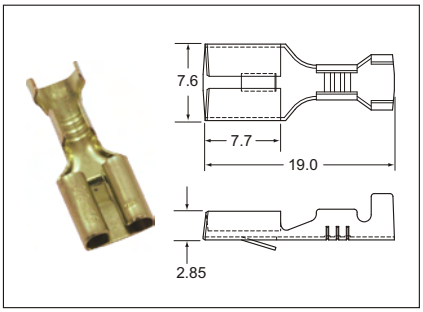

ITEM NO.	WIRE RANGE A.W.G.	WIRE RANGE mm²	MATERIAL	PLATINGS	Q'TY REEL	APPLICATOR	DIES
FM250-12B98	22-16	0.3-1.4	Brass	None	5000	CDM-98013-M	CDT-98013-M

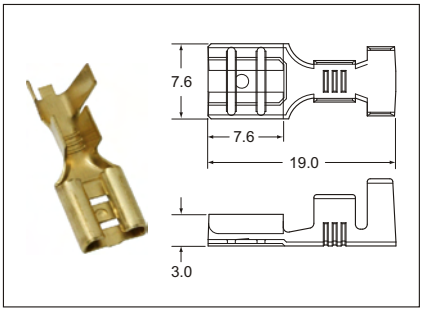

ITEM NO.	WIRE RANGE A.W.G.	WIRE RANGE mm²	MATERIAL	PLATINGS	Q'TY REEL	APPLICATOR	DIES
FL250-13B28	16-12	1.5-3.0	Brass	Tin	5000	CDM-98014-L	CDT-98014-L
FL250-13B98	16-12	1.5-3.0	Brass	None	5000	CDM-98014-L	CDT-98014-L
FL250-13BT8	16-12	1.5-3.0	Brass	Pre-Tin	5000	CDM-98014-L	CDT-98014-L

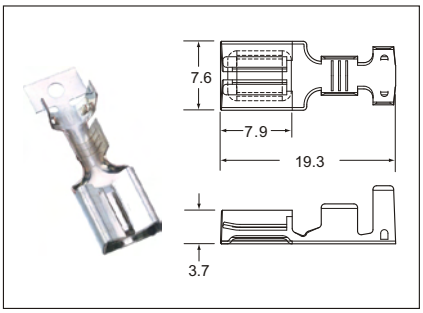

ITEM NO.	WIRE RANGE A.W.G.	WIRE RANGE mm²	MATERIAL	PLATINGS	Q'TY REEL	APPLICATOR	DIES
1211A0147	14-12	2.0-3.0	Copper Alloy	Pre-Tin	1500	CDM-95011-L	CDT-95011-L

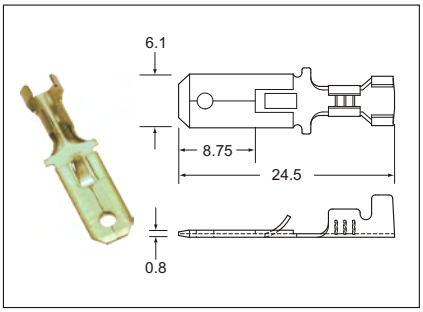

ITEM NO.	WIRE RANGE A.W.G.	WIRE RANGE mm²	MATERIAL	PLATINGS	Q'TY REEL	APPLICATOR	DIES
MM250-04B9	16-14	1.4-2.0	Brass	None	5000	CDM-98015-M	CDT-98015-M

250
FLAG SERIES

SPECIFICATIONS

Material	Connector	-
	Terminal	BRASS
Operating Temperature Range		-40°C~+120°C
Voltage Drop		3mV/A
Isolation Resistance		100MΩ
Dielectric Resistance		1000V
Applicable Wire Size		0.3mm² ~3.0mm² (22 AWG~12 AWG)
Maximum Electric Current		30A

250 FLAG SERIES

TERMINAL

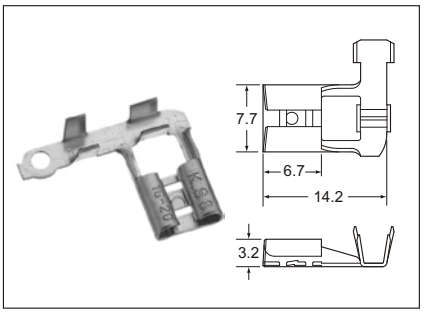

ITEM NO.	WIRE RANGE A.W.G.	WIRE RANGE mm²	MATERIAL	PLATINGS	Q'TY REEL	APPLICATOR	DIES
GM250-01B28	20-16	0.5-1.4	Brass	Tin	2500	CDM-93020-M	CDT-93020-M
GM250-01B98	20-16	0.5-1.4	Brass	None	2500	CDM-93020-M	CDT-93020-M
GM250-01BT8	20-16	0.5-1.4	Brass	Pre-Tin	2500	CDM-93020-M	CDT-93020-M

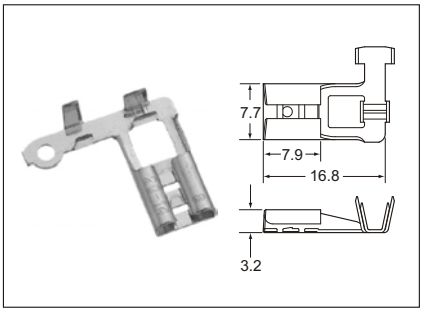

ITEM NO.	WIRE RANGE A.W.G.	WIRE RANGE mm²	MATERIAL	PLATINGS	Q'TY REEL	APPLICATOR	DIES
GL250-02B28	20-14	0.5-1.4	Brass	Tin	2500	CDM-93017-L	CDT-93017-L
GL250-02B98	20-14	0.5-1.4	Brass	None	2500	CDM-93017-L	CDT-93017-L
GL250-02BT8	20-14	0.5-1.4	Brass	Pre-Tin	2500	CDM-93017-L	CDT-93017-L

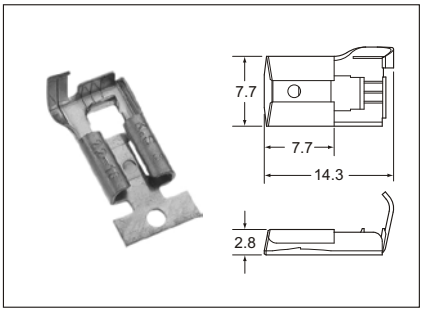

ITEM NO.	WIRE RANGE A.W.G.	WIRE RANGE mm²	MATERIAL	PLATINGS	Q'TY REEL	APPLICATOR	DIES
GM250-03B28	22-18	0.3-0.8	Brass	Tin	1500	CDM-93021-M	CDT-93021-M
GM250-03B98	22-18	0.3-0.8	Brass	None	1500	CDM-93021-M	CDT-93021-M
GM250-03BT8	22-18	0.3-0.8	Brass	Pre-Tin	1500	CDM-93021-M	CDT-93021-M

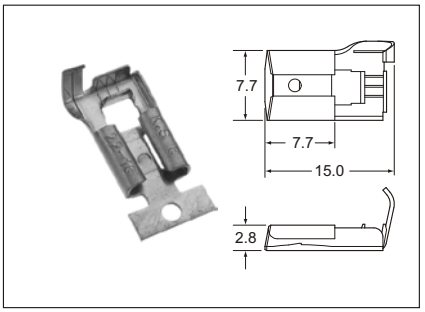

ITEM NO.	WIRE RANGE A.W.G.	WIRE RANGE mm²	MATERIAL	PLATINGS	Q'TY REEL	APPLICATOR	DIES
◎GL250-04B26	20-14	0.5-2.0	Brass	Tin	1500	CDM-93046-L	CDT-93046-L
◎GL250-04B96	20-14	0.5-2.0	Brass	None	1500	CDM-93046-L	CDT-93046-L
◎GL250-04BT6	20-14	0.5-2.0	Brass	Pre-Tin	1500	CDM-93046-L	CDT-93046-L

ALL LISTED
◎: NOT UL AND C-UL LISTED

250
FLAG SERIES

TERMINAL

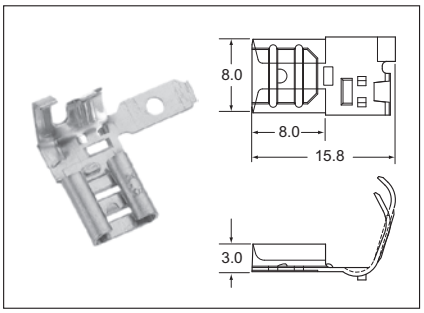

ITEM NO.	WIRE RANGE		MATERIAL	PLATINGS	Q'TY REEL	APPLICATOR	DIES
	A.W.G.	mm²					
GJ250-05B28	18-12	0.8-3.0	Brass	Tin	1500	CDM-93022-J	CDT-93022-J
GJ250-05B98	18-12	0.8-3.0	Brass	None	1500	CDM-93022-J	CDT-93022-J
GJ250-05BT8	18-12	0.8-3.0	Brass	Pre-Tin	1500	CDM-93022-J	CDT-93022-J

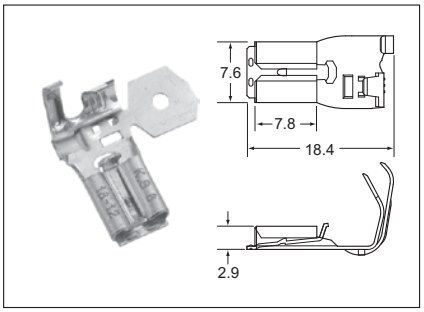

ITEM NO.	WIRE RANGE		MATERIAL	PLATINGS	Q'TY REEL	APPLICATOR	DIES
	A.W.G.	mm²					
GJ250-06BT8	18-14	0.8-2.0	Brass	Pre-Tin	1500	CDM-93047-J	CDT-93047-J

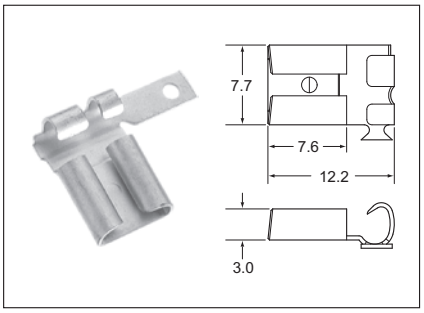

ITEM NO.	WIRE RANGE		MATERIAL	PLATINGS	Q'TY REEL	APPLICATOR	DIES
	A.W.G.	mm²					
GM250-07B28	22-16	0.3-1.4	Brass	Tin	2500	CDM-94006-M	CDT-94006-M
GM250-07B98	22-16	0.3-1.4	Brass	None	3000	CDM-94006-M	CDT-94006-M
GM250-07BT8	22-16	0.3-1.4	Brass	Pre-Tin	2500	CDM-94006-M	CDT-94006-M

ALL LISTED

250 SERIES HOUSINGS
UNSEALED

SPECIFICATIONS

Material	Connector	NY66
	Male Terminal	-
	Female Terminal	-
Operating Temperature Range		-40°C~+120°C
Voltage Drop		-
Isolation Resistance		100MΩ
Dielectric Resistance		1000V
Applicable Wire Size		-
Maximum Electric Current		-

250 SERIES HOUSINGS
UNSEALED

HOUSING

POLE		FEMALE
1		**F1250-11NN**  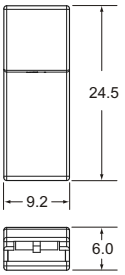 **500 PCS**

- HOUSING (UNIT:mm)
  MATERIAL:NY66
  COLOR:NATURAL

312 SERIES

AUTOMOTIVE CONNECTORS

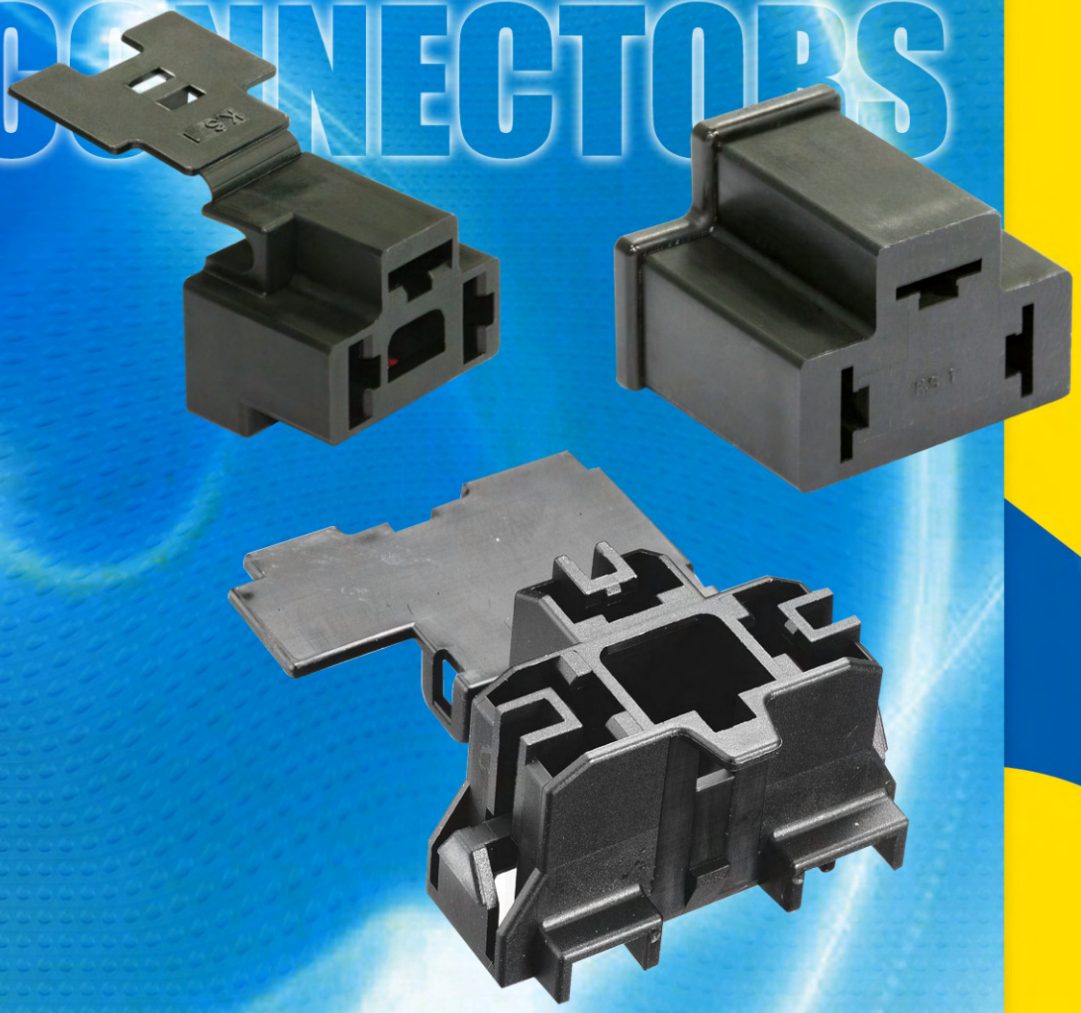

312
AUTOMOBILE LIGHTING SERIES
UNSEALED

CONSTRUCTION

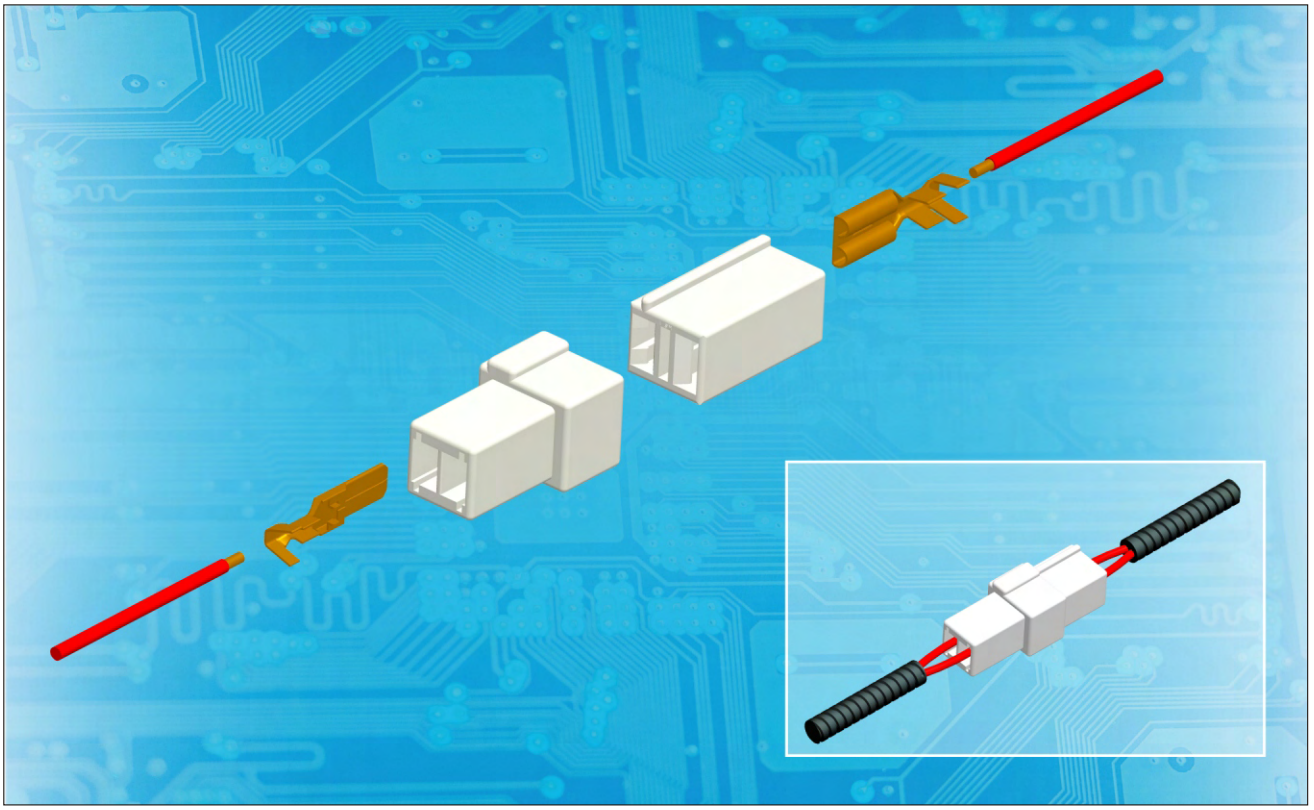

SPECIFICATIONS

Material	Connector	NY66
	Male Terminal	BRASS
	Female Terminal	BRASS
Operating Temperature Range		-40°C~+120°C
Voltage Drop		5mV/A
Isolation Resistance		100MΩ
Dielectric Resistance		1000V
Applicable Wire Size		0.85mm² ~6.0mm² (18 AWG~10 AWG)
Maximum Electric Current		27A

312
AUTOMOBILE LIGHTING SERIES
UNSEALED

TERMINAL

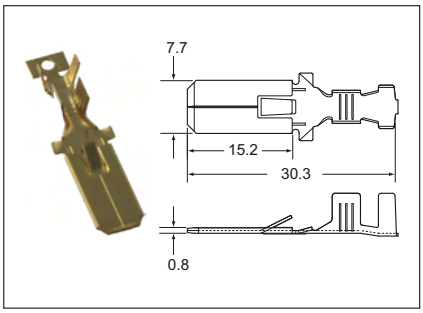

ITEM NO.	WIRE RANGE		MATERIAL	PLATINGS	Q'TY	APPLICATOR	DIES
	A.W.G.	mm²			REEL		
1100A0281	18-16	0.85-1.25	Brass	None	2500	CDM-95032-M	CDT-95032-M
1100A0283	12-10	3.0-6.0	Brass	None	2000	CDM-95032-L	CDT-95032-L
1105A0283	12-10	3.0-5.0	Brass	Tin	2000	CDM-95032-L	CDT-95032-L

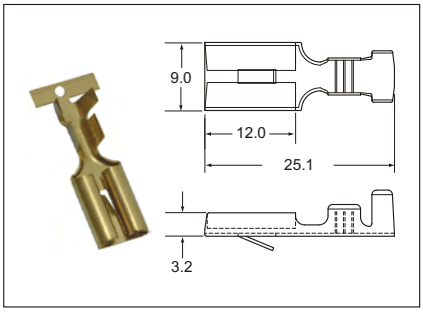

ITEM NO.	WIRE RANGE		MATERIAL	PLATINGS	Q'TY	APPLICATOR	DIES
	A.W.G.	mm²			REEL		
1200A0281	18-16	0.85-1.25	Brass	None	1000	CDM-97010-M	CDT-97010-M
1200A0283	12-10	3.0-5.0	Brass	None	1000	CDM-97010-L	CDT-97010-L
1201A0281	18-16	0.85-1.25	Brass	Pre-Tin	1000	CDM-97010-M	CDT-97010-M
1201A0283	12-10	3.0-5.0	Brass	Pre-Tin	1000	CDM-97010-L	CDT-97010-L

HOUSING

POLE	MALE	FEMALE
2	**3102A0781**  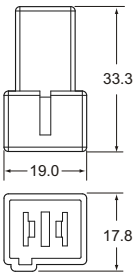 **100 PCS**	**3202A0781**  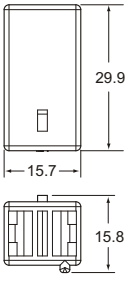 **100 PCS**
3+2		**3205A0781**  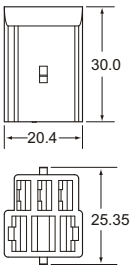 **100 PCS**

• HOUSING (UNIT:mm)
MATERIAL:NY66
COLOR:NATURAL

312
AUTOMOBILE LIGHTING SERIES

SPECIFICATIONS

Material	Connector	NY66
	Male Terminal	-
	Female Terminal	BRASS
Operating Temperature Range		-40°C~+120°C
Voltage Drop		5mV/A
Isolation Resistance		100MΩ
Dielectric Resistance		1000V
Applicable Wire Size		0.85mm^2 ~1.25mm^2 (18 AWG~16 AWG)
Maximum Electric Current		13A

312
AUTOMOBILE LIGHTING SERIES

TERMINAL

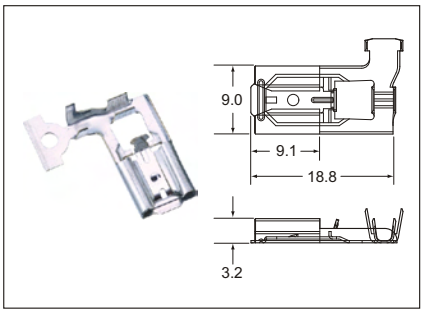

ITEM NO.	WIRE RANGE		MATERIAL	PLATINGS	Q'TY	APPLICATOR	DIES
	A.W.G.	mm²			REEL		
1201A0131	18-16	0.85-1.25	Brass	Pre-Tin	1500	CDM-94134-M	CDT-94134-M

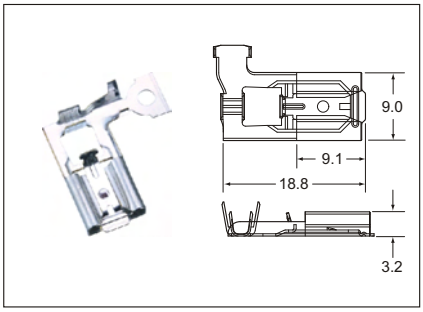

ITEM NO.	WIRE RANGE		MATERIAL	PLATINGS	Q'TY	APPLICATOR	DIES
	A.W.G.	mm²			REEL		
1201A0136	18-16	0.85-1.25	Brass	Pre-Tin	1500	CDM-94135-M	CDT-94135-M

HOUSING

POLE		FEMALE
3		**3203A0132** 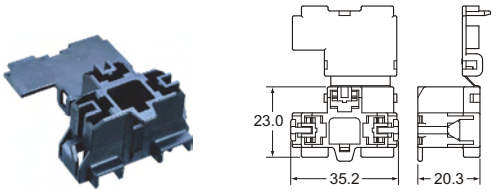 **50 PCS**

- HOUSING (UNIT:mm)
  MATERIAL:NY66
  COLOR:BLACK

312
AUTOMOBILE LIGHTING SERIES
UNSEALED

SPECIFICATIONS

Material	Connector	NY66
	Male Terminal	-
	Female Terminal	BRASS
Operating Temperature Range		-40°C~+120°C
Voltage Drop		5mV/A
Isolation Resistance		100MΩ
Dielectric Resistance		1000V
Applicable Wire Size		1.25mm^2 ~2.0mm^2 (16 AWG~14 AWG)
Maximum Electric Current		18A

312
AUTOMOBILE LIGHTING SERIES
UNSEALED

TERMINAL

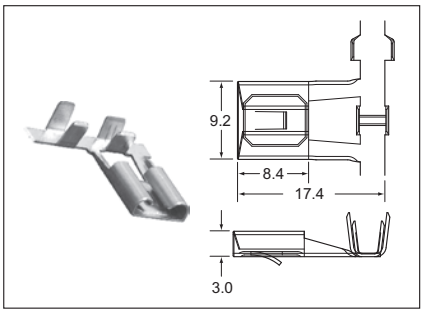

ITEM NO.	WIRE RANGE		MATERIAL	PLATINGS	Q'TY	APPLICATOR	DIES
	A.W.G.	mm^2			REEL		
1200A0302	16-14	1.25-2.0	Brass	None	2500	CDM-95035-L	CDT-95035-L
1201A0302	16-14	1.25-2.0	Brass	Pre-Tin	2000	CDM-95035-L	CDT-95035-L

HOUSING

POLE		FEMALE
3		**3203A0302** 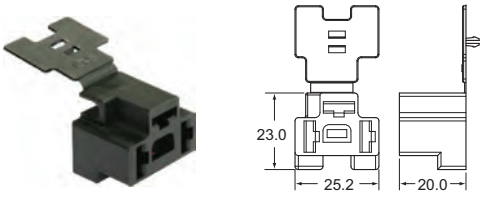 **50 PCS**

- HOUSING (UNIT:mm)
  MATERIAL:NY66
  COLOR:BLACK

312
AUTOMOBILE LIGHTING SERIES
UNSEALED

SPECIFICATIONS

Material	Connector	ABS
	Male Terminal	-
	Female Terminal	BRASS
Operating Temperature Range		-40°C~+120°C
Voltage Drop		5mV/A
Isolation Resistance		100MΩ
Dielectric Resistance		1000V
Applicable Wire Size		0.85mm^2 ~1.25mm^2 (18 AWG~16 AWG)
Maximum Electric Current		13A

312
AUTOMOBILE LIGHTING SERIES
UNSEALED

TERMINAL

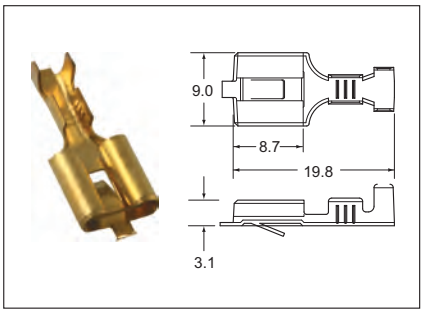

ITEM NO.	WIRE RANGE		MATERIAL	PLATINGS	Q'TY	APPLICATOR	DIES
	A.W.G.	mm^2			REEL		
1200A0292	18-16	0.85-1.25	Brass	None	3000	CDM-95030-M	CDT-95030-M

HOUSING

POLE		FEMALE
3		**3203A0292**  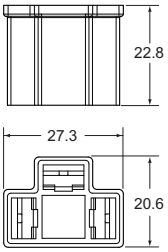 **50 PCS**

• HOUSING (UNIT:mm)
MATERIAL:ABS
COLOR:BLACK

312
AUTOMOBILE LIGHTING SERIES
UNSEALED

SPECIFICATIONS

Material	Connector	NY66
	Male Terminal	BRASS
	Female Terminal	-
Operating Temperature Range		-40°C~+120°C
Voltage Drop		5mV/A
Isolation Resistance		100MΩ
Dielectric Resistance		1000V
Applicable Wire Size		0.85mm^2 ~6.0mm^2 (18 AWG~10 AWG)
Maximum Electric Current		30A

312
AUTOMOBILE LIGHTING SERIES
UNSEALED

TERMINAL

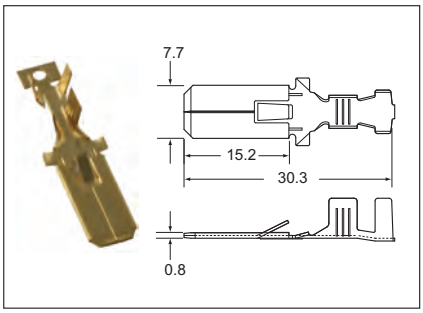

ITEM NO.	WIRE RANGE		MATERIAL	PLATINGS	Q'TY	APPLICATOR	DIES
	A.W.G.	mm^2			REEL		
1100A0281	18-16	0.85-1.25	Brass	None	2500	CDM-95032-M	CDT-95032-M
1100A0283	12-10	3.0-6.0	Brass	None	2000	CDM-95032-L	CDT-95032-L
1105A0283	12-10	3.0-5.0	Brass	Tin	2000	CDM-95032-L	CDT-95032-L

HOUSING

POLE	MALE	
3	**3103A0282**  **50 PCS** 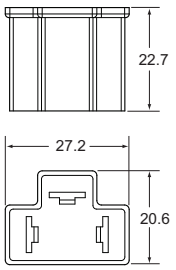	

• HOUSING (UNIT:mm)
MATERIAL:NY66
COLOR:BLACK

312 SERIES

SPECIFICATIONS

Material	Connector	-
	Male Terminal	-
	Female Terminal	BRASS
Operating Temperature Range		-40°C~+120°C
Voltage Drop		5mV/A
Isolation Resistance		-
Dielectric Resistance		-
Applicable Wire Size		0.85mm^2 ~6.0mm^2 (18 AWG~10 AWG)
Maximum Electric Current		40A

312 SERIES

TERMINAL

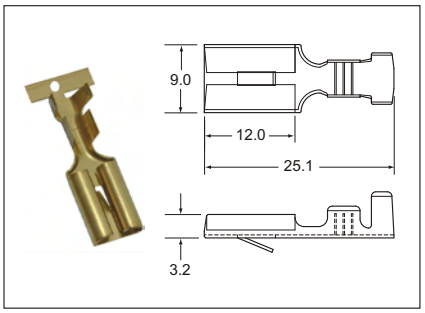

ITEM NO.	WIRE RANGE		MATERIAL	PLATINGS	Q'TY	APPLICATOR	DIES
	A.W.G.	mm^2			REEL		
1200A0281	18-16	0.85-1.25	Brass	None	1000	CDM-97010-M	CDT-97010-M
1200A0283	12-10	3.0-5.0	Brass	None	1000	CDM-97010-L	CDT-97010-L
1201A0281	18-16	0.85-1.25	Brass	Pre-Tin	1000	CDM-97010-M	CDT-97010-M
1201A0283	12-10	3.0-5.0	Brass	Pre-Tin	1000	CDM-97010-L	CDT-97010-L

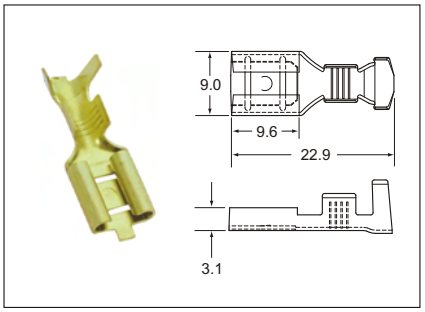

ITEM NO.	WIRE RANGE		MATERIAL	PLATINGS	Q'TY	APPLICATOR	DIES
	A.W.G.	mm^2			REEL		
FJ312-01B28	14-10	2.0-6.0	Brass	Tin	4000	CDM-96020-J	CDT-96020-J
FJ312-01B98	14-10	2.0-6.0	Brass	None	3000	CDM-96020-J	CDT-96020-J

375 SERIES

AUTOMOTIVE CONNECTORS



375 AM
MAXI POWER TIMER

SPECIFICATIONS

Material	Connector	PBT OR NY66
	Male Terminal	-
	Female Terminal	COPPER STAINLESS STEEL OR PBS STAINLESS STEEL
Operating Temperature Range		-40°C~+130°C
Voltage Drop		3mV/A
Isolation Resistance		100MΩ
Dielectric Resistance		1000V
Applicable Wire Size		0.2mm^2 ~10.0mm^2 (24 AWG~6 AWG)
Maximum Electric Current		58A

375 AM
MAXI POWER TIMER

TERMINAL

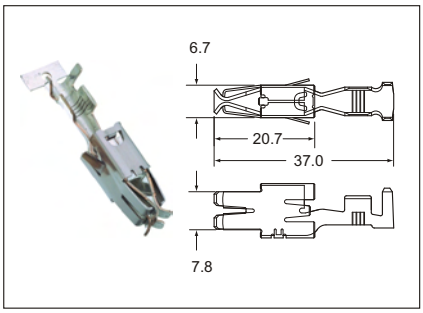

ITEM NO.	WIRE RANGE		MATERIAL	PLATINGS	Q'TY	APPLICATOR	DIES
	A.W.G.	mm²			REEL		
1241A0058	12-10	3.0-6.0	Copper Stainless Steel	Pre-Tin	750	CDM-93111-L	CDT-93111-L
1241A0059	10-6	6.0-10.0	Copper Stainless Steel	Pre-Tin	500	CDM-93111-XL	CDT-93111-XL

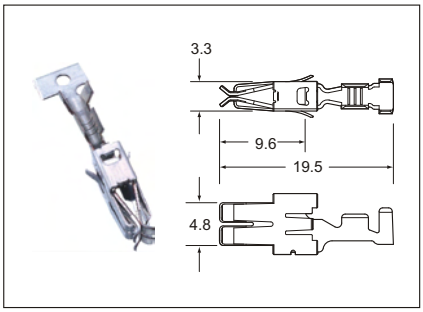

ITEM NO.	WIRE RANGE		MATERIAL	PLATINGS	Q'TY	APPLICATOR	DIES
	A.W.G.	mm²			REEL		
1221A0125	24-20	0.2-0.5	PBS Stainless Steel	Pre-Tin	2000	CDM-94132-S	CDT-94132-S
1221A0126	20-18	0.5-0.85	PBS Stainless Steel	Pre-Tin	2000	CDM-94132-M	CDT-94132-M
1221A0127	16-14	1.25-2.0	PBS Stainless Steel	Pre-Tin	2000	CDM-94132-L	CDT-94132-L
1221A0128	14-12	2.0-4.0	PBS Stainless Steel	Pre-Tin	2000	CDM-94132-L	CDT-94132-L

HOUSING

POLE		FEMALE
2		**3202A0032**  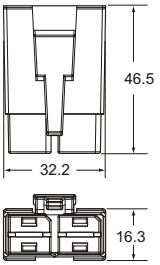 **25 PCS**
2		**3202A0062**  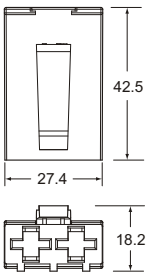 **25 PCS**

• HOUSING (UNIT:mm)
MATERIAL:PBT
COLOR:BLACK

375 AM
MAXI POWER TIMER

HOUSING

POLE		FEMALE
4		**3204A0072** **187 & 375 HYBIRD**  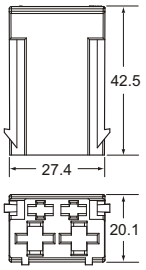 **25 PCS**

POLE		FEMALE
2		**3202A0522**  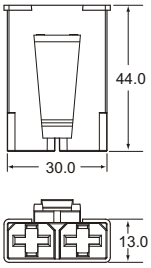 **25 PCS**
2		**3202A0689**  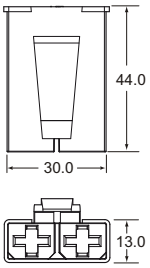 **25 PCS**

- HOUSING (UNIT:mm)
  MATERIAL:NY66
  COLOR:3204A0072, 3202A0522:BLACK
  3202A0689:GREY

375 SERIES

SPECIFICATIONS

Material	Connector	-
	Male Terminal	BRASS
	Female Terminal	-
Operating Temperature Range		-30°C~+130°C
Voltage Drop		10mV/A
Isolation Resistance		100MΩ
Dielectric Resistance		1800V
Applicable Wire Size		3.0mm^2 ~6.0mm^2 (12 AWG~10 AWG)
Maximum Electric Current		40A

375 SERIES

TERMINAL

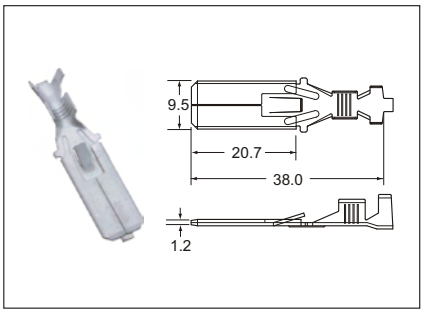

ITEM NO.	WIRE RANGE		MATERIAL	PLATINGS	Q'TY	APPLICATOR	DIES
	A.W.G.	mm^2			REEL		
1100A0603	12-10	3.0	Brass	None	2000	CDM-96028-L	CDT-96028-L
1105A0603	12-10	3.0	Brass	Tin	2000	CDM-96028-L	CDT-96028-L
1100A0604	12-10	6.0	Brass	None	2000	CDM-96028-J	CDT-96028-J
1105A0604	12-10	6.0	Brass	Tin	2000	CDM-96028-J	CDT-96028-J

OTHERS

AUTOMOTIVE

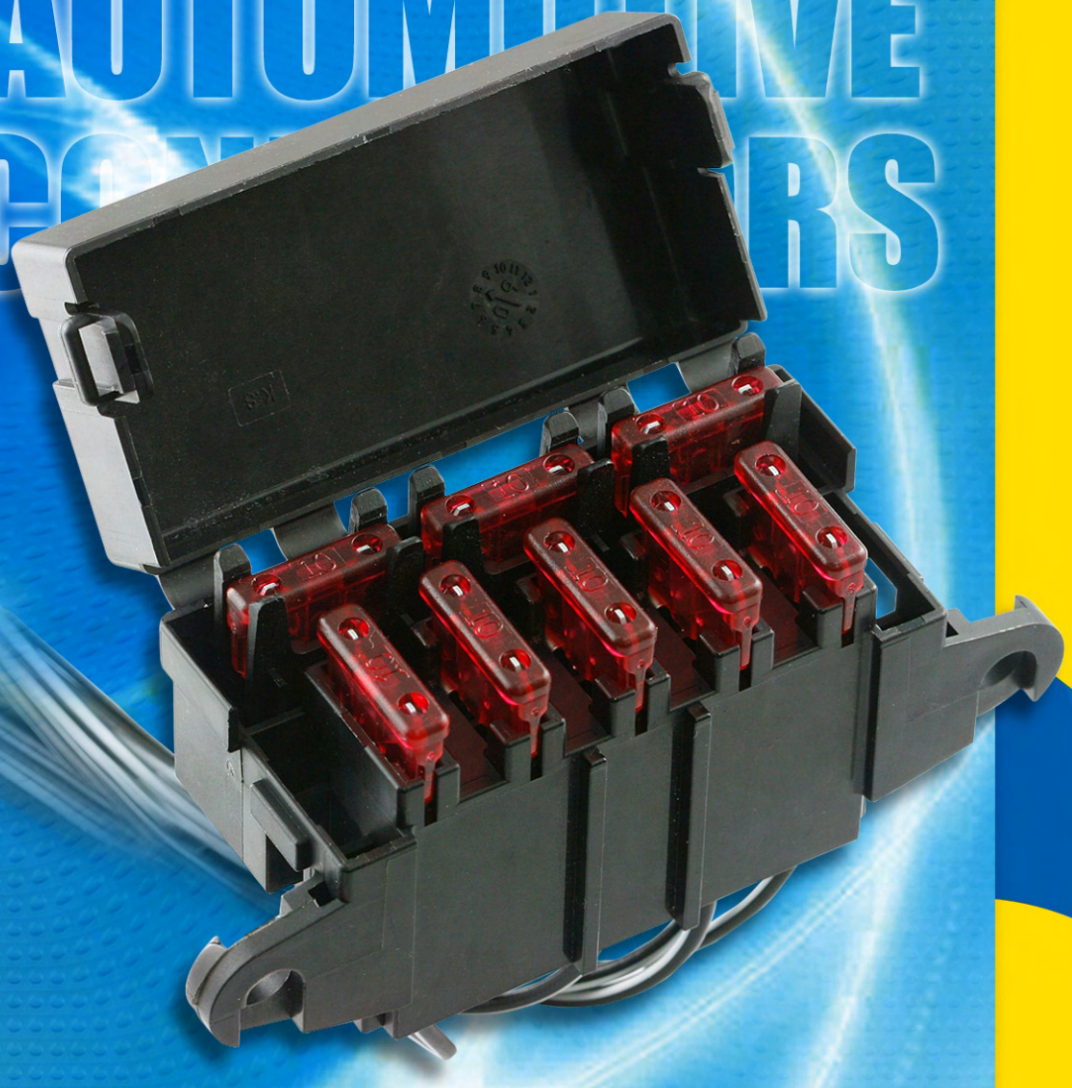

.093 (2.36) AM
PIN AND SOCKET CONNECTORS
UNSEALED

CONSTRUCTION

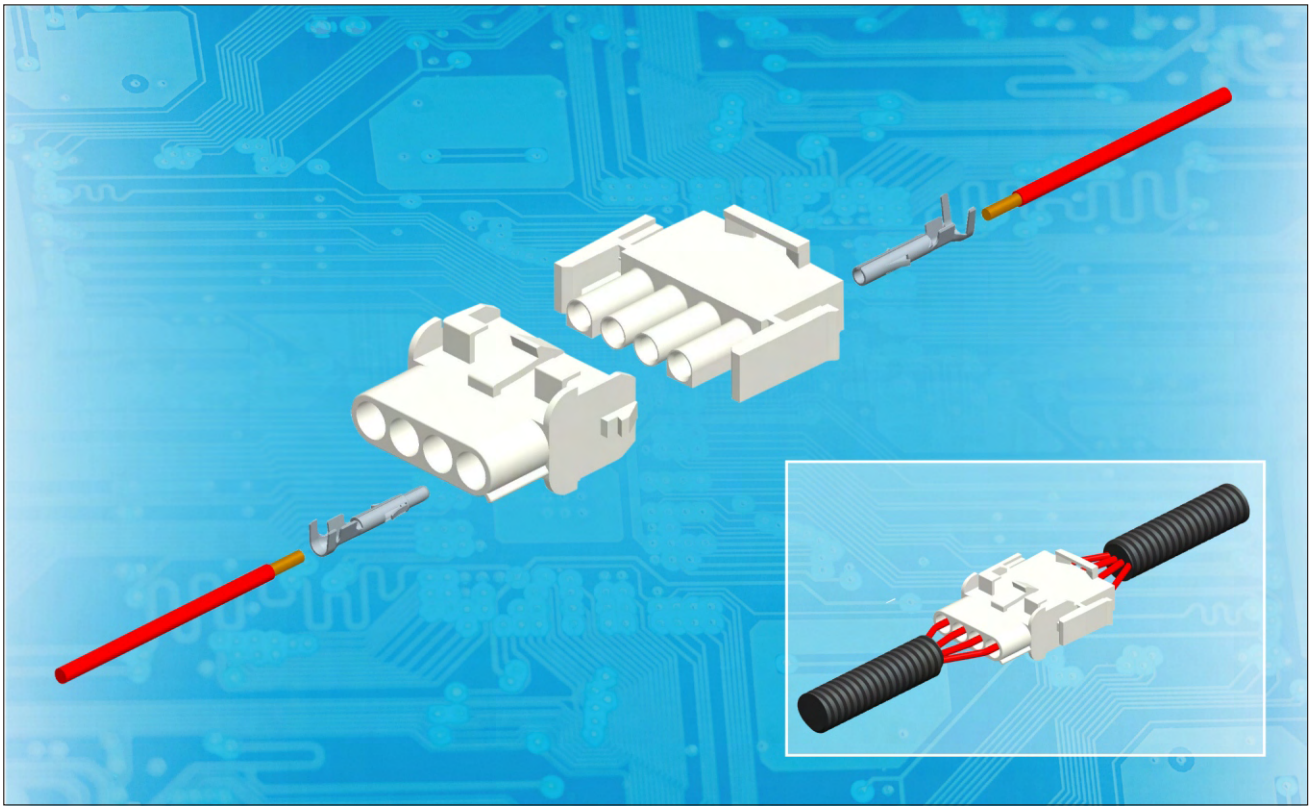

SPECIFICATIONS

Material	Connector	NY66
	Male Terminal	BRASS OR PHOSPHOR BRONZE
	Female Terminal	BRASS OR PHOSPHOR BRONZE
Operating Temperature Range		-55°C~+125°C
Voltage Drop		3mV/A
Isolation Resistance		100MΩ
Dielectric Resistance		2200V
Applicable Wire Size		0.5mm^2 ~6.0mm^2 (20 AWG~10 AWG)
Maximum Electric Current		27A

.093 (2.36) AM
PIN AND SOCKET CONNECTORS
UNSEALED

TERMINAL

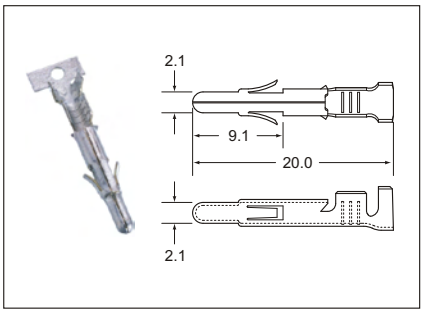

ITEM NO.	WIRE RANGE A.W.G.	WIRE RANGE mm^2	MATERIAL	PLATINGS	Q'TY REEL	APPLICATOR	DIES
1101Z0002	20-14	0.5-2.0	Brass	Pre-Tin	2500	CDM-94007-M	CDT-94007-M

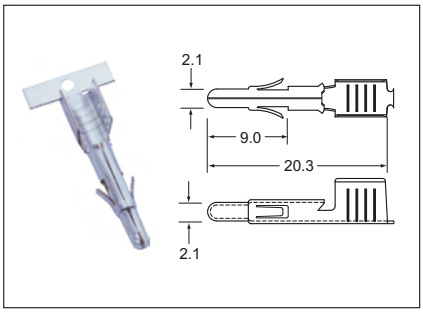

ITEM NO.	WIRE RANGE A.W.G.	WIRE RANGE mm^2	MATERIAL	PLATINGS	Q'TY REEL	APPLICATOR	DIES
1121Z0033	12-10	3.0-6.0	Phosphor Bronze	Pre-Tin	2000	CDM-96019-L	CDT-96019-L

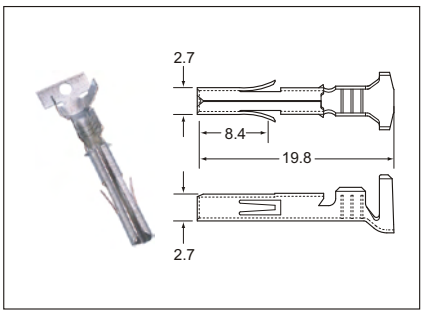

ITEM NO.	WIRE RANGE A.W.G.	WIRE RANGE mm^2	MATERIAL	PLATINGS	Q'TY REEL	APPLICATOR	DIES
1201Z0002	20-14	0.5-2.0	Brass	Pre-Tin	2000	CDM-93052-M	CDT-93052-M
1221Z0002	20-14	0.5-2.0	Phosphor Bronze	Pre-Tin	2000	CDM-93052-M	CDT-93052-M

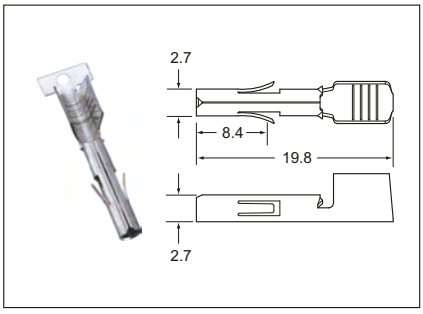

ITEM NO.	WIRE RANGE A.W.G.	WIRE RANGE mm^2	MATERIAL	PLATINGS	Q'TY REEL	APPLICATOR	DIES
1221Z0018	12-10	3.0-6.0	Phosphor Bronze	Pre-Tin	2500	CDM-94114-L	CDT-94114-L

.093 (2.36) AM
PIN AND SOCKET CONNECTORS
UNSEALED

HOUSING

POLE	MALE	FEMALE
4	**3104Z0001** ◎  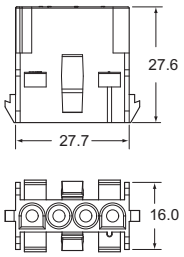 **100 PCS**	**3204Z0001**  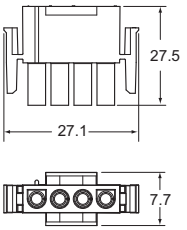 **50 PCS**

• HOUSING (UNIT:mm)
MATERIAL:NY66
COLOR:NATURAL

ALL LISTED
◎: NOT RU AND C-RU LISTED

.093 (2.36) AM
PIN AND SOCKET CONNECTORS
SEALED

RUBBER SEAL

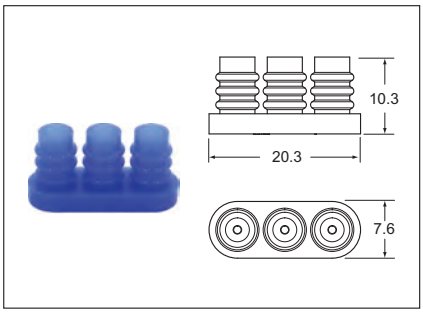

ITEM NO.	MATERIAL	WIRE INSULATEION DIAMETER(mm^2)	APPLICABLE HOUSINGS	Q'TY BAG
7003Z0106	SILICONE	1.5-3.3	3203Z0101	500

HOUSING

POLE	MALE	FEMALE
3	**3103Z0101**  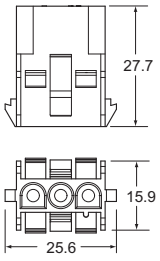 **100 PCS**	**3203Z0101**  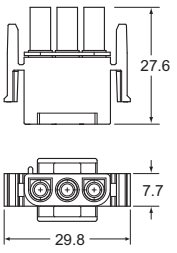 **50 PCS**

• HOUSING (UNIT:mm)
MATERIAL:NY66
COLOR:NATURAL

.093 (2.36) AM
PIN AND SOCKET CONNECTORS II
UNSEALED

CONSTRUCTION

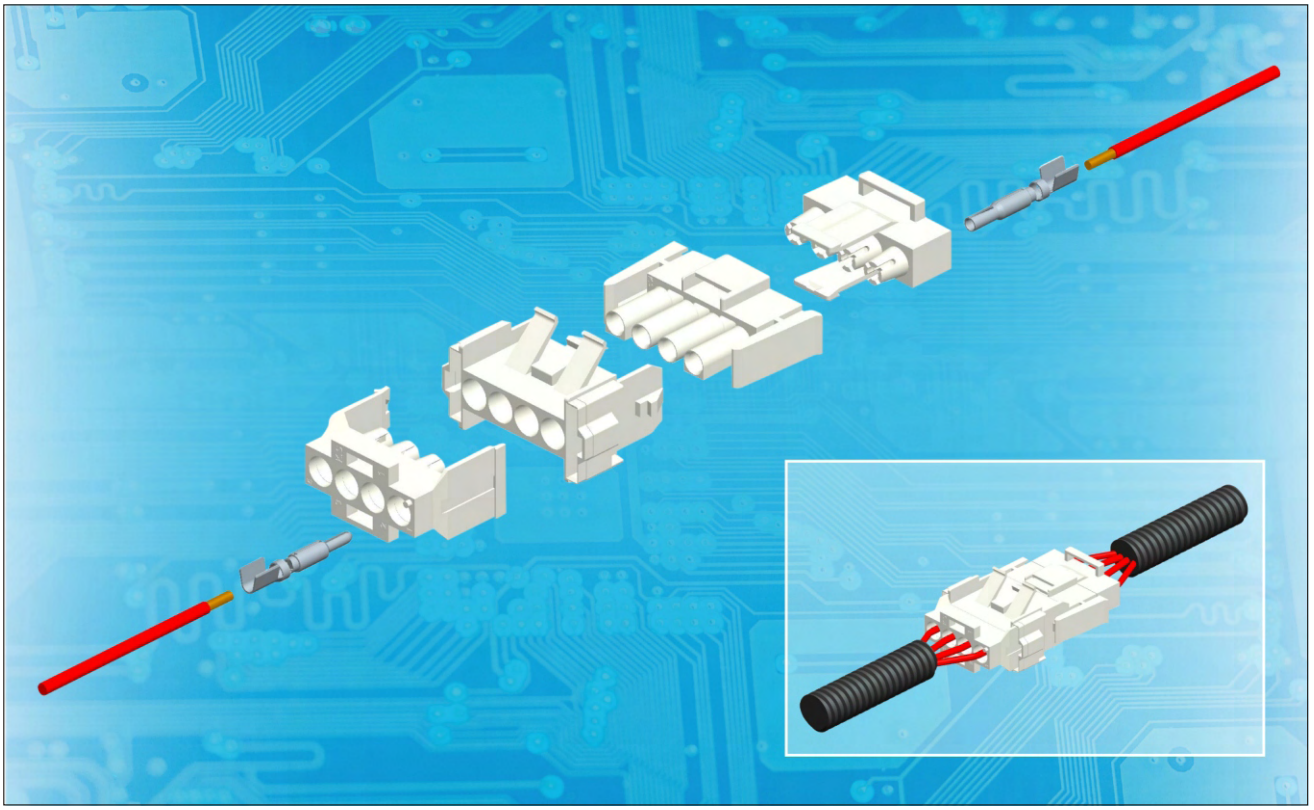

SPECIFICATIONS

Material	Connector	NY66
	Male Terminal	BRASS OR PHOSPHOR BRONZE
	Female Terminal	PHOSPHOR BRONZE
Operating Temperature Range		-55°C~+125°C
Voltage Drop		3mV/A
Isolation Resistance		100MΩ
Dielectric Resistance		2200V
Applicable Wire Size		0.5mm^2 ~6.0mm^2 (20 AWG~10 AWG)
Maximum Electric Current		27A

.093 (2.36) AM
PIN AND SOCKET CONNECTORS II
UNSEALED

TERMINAL

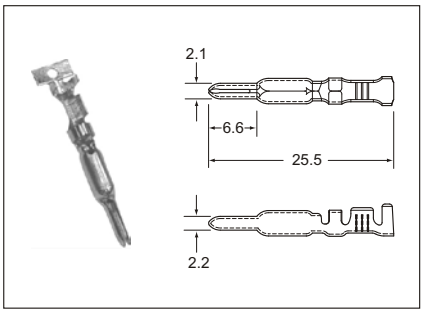

ITEM NO.	WIRE RANGE		MATERIAL	PLATINGS	Q'TY	APPLICATOR	DIES
	A.W.G.	mm²			REEL		
1101Z0022	20-14	0.5-2.0	Brass	Pre-Tin	3000	CDM-94101-M	CDT-94101-M

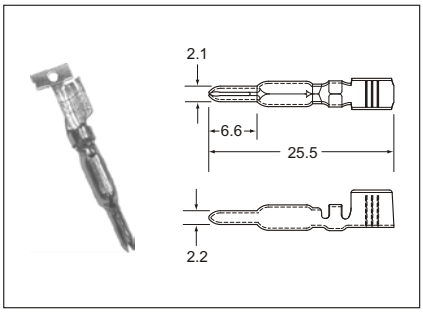

ITEM NO.	WIRE RANGE		MATERIAL	PLATINGS	Q'TY	APPLICATOR	DIES
	A.W.G.	mm²			REEL		
1121Z0018	12-10	3.0-6.0	Phosphor Bronze	Pre-Tin	2000	CDM-94102-L	CDT-94102-L

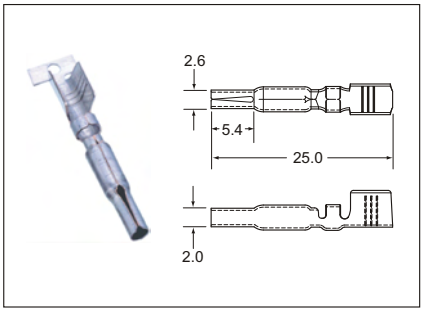

ITEM NO.	WIRE RANGE		MATERIAL	PLATINGS	Q'TY	APPLICATOR	DIES
	A.W.G.	mm²			REEL		
1221Z0023	12-10	3.0-6.0	Phosphor Bronze	Pre-Tin	2000	CDM-94102-L	CDT-94102-L

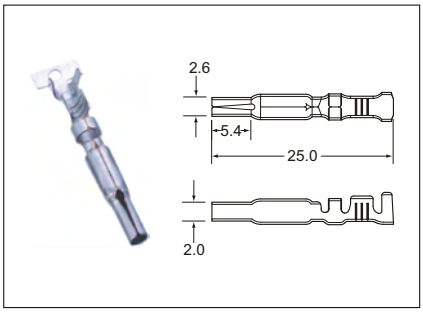

ITEM NO.	WIRE RANGE		MATERIAL	PLATINGS	Q'TY	APPLICATOR	DIES
	A.W.G.	mm²			REEL		
1221Z0027	20-14	0.5-2.0	Phosphor Bronze	Pre-Tin	3000	CDM-94101-M	CDT-94101-M

ALL LISTED

.093 (2.36) AM
PIN AND SOCKET CONNECTORS II
UNSEALED

HOUSING

POLE	MALE	LOCK	FEMALE	LOCK
3	**3103Z0014** 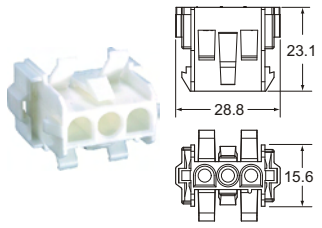 **100 PCS**	**3603Z0014** 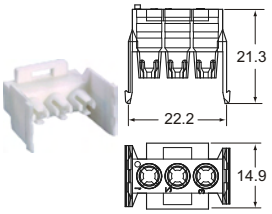 **100 PCS**	**3203Z0014** 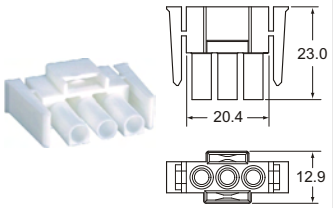 **100 PCS**	**3703Z0014** 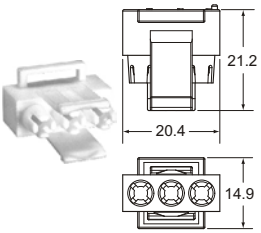 **100 PCS**
4	**3104Z0014** 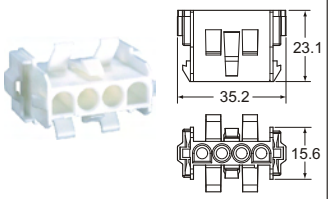 **100 PCS**	**3604Z0014** 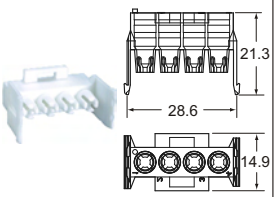 **100 PCS**	**3204Z0014** 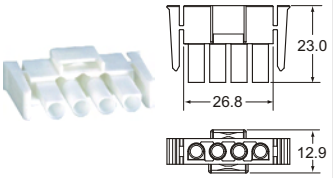 **100 PCS**	**3704Z0014** 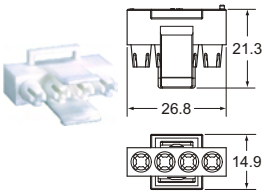 **100 PCS**

- HOUSING (UNIT:mm)
  MATERIAL:NY66
  COLOR:WHITE

ALL LISTED

0.84 (2.13) MX PIN AND SOCKET
UNSEALED

CONSTRUCTION

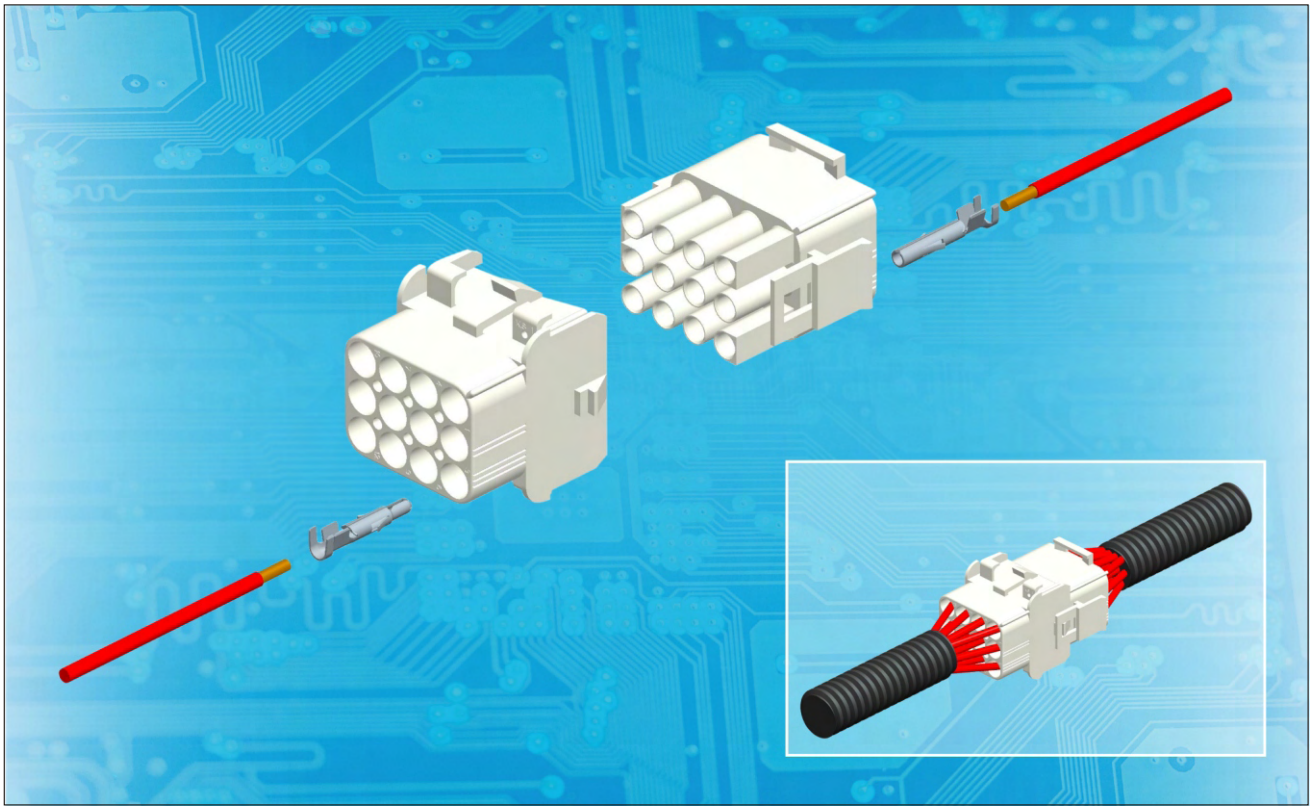

SPECIFICATIONS

Material	Connector	NY66
	Male Terminal	BRASS
	Female Terminal	BRASS
Operating Temperature Range		-55°C~+105°C
Voltage Drop		3mV/A
Isolation Resistance		100MΩ
Dielectric Resistance		2200V
Applicable Wire Size		0.5mm² ~2.0mm² (20 AWG~14 AWG)
Maximum Electric Current		12A

0.84 (2.13) MX PIN AND SOCKET

UNSEALED

TERMINAL

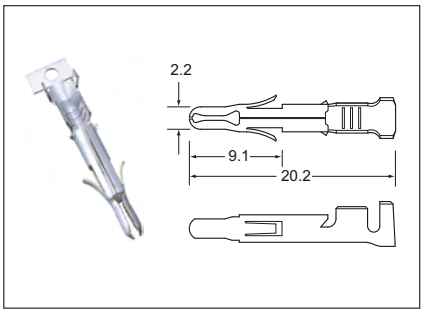

ITEM NO.	WIRE RANGE A.W.G.	WIRE RANGE mm²	MATERIAL	PLATINGS	Q'TY REEL	APPLICATOR	DIES
1101Z0042	20-14	0.5-2.0	Brass	Pre-Tin	4000	CDM-94113-M	CDT-94113-M

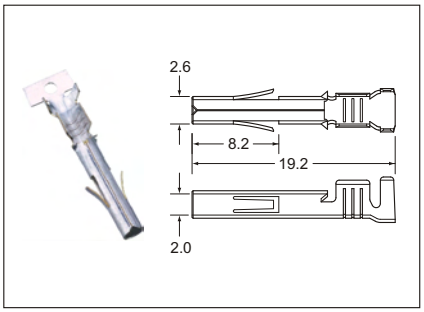

ITEM NO.	WIRE RANGE A.W.G.	WIRE RANGE mm²	MATERIAL	PLATINGS	Q'TY REEL	APPLICATOR	DIES
1201Z0042	20-14	0.5-2.0	Brass	Pre-Tin	4000	CDM-94113-M	CDT-94113-M

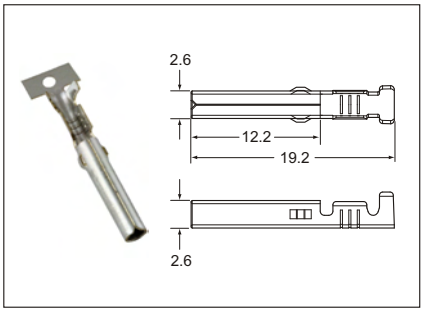

ITEM NO.	WIRE RANGE A.W.G.	WIRE RANGE mm²	MATERIAL	PLATINGS	Q'TY REEL	APPLICATOR	DIES
1201Z0046	20-14	0.5-2.0	Brass	Pre-Tin	4000	CDM-98048-M	CDT-98048-M

0.84 (2.13) MX PIN AND SOCKET

UNSEALED

HOUSING

POLE	MALE	FEMALE
2	3102Z0041 ◎ 3102Z0061 ◎  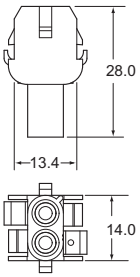 100 PCS	3202Z0041 ◎ 3202Z0061 ◎  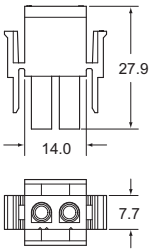 100 PCS
6	3106Z0041 3106Z0061  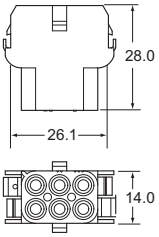 100 PCS	3206Z0041 3206Z0061  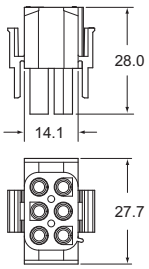 100 PCS
9	3109Z0041 3109Z0061  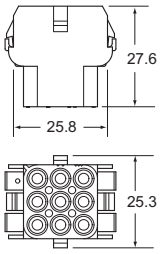 50 PCS	3209Z0041 3209Z0061  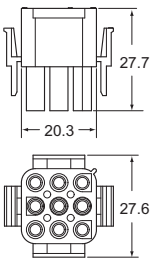 50 PCS
12	3112Z0041 3112Z0061  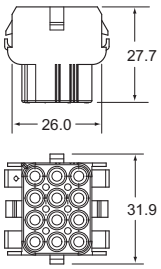 50 PCS	3212Z0041 3212Z0061  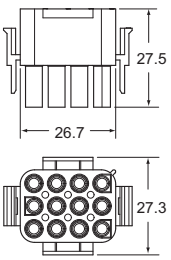 50 PCS

• HOUSING (UNIT:mm)
MATERIAL:NY66
COLOR:NATURAL

ALL LISTED
◎: NOT RU AND C-RU LISTED

0.93 (2.36) KST PIN AND SOCKET

UNSEALED

SPECIFICATIONS

Material	Connector	NY66
	Male Terminal	BRASS
	Female Terminal	BRASS
Operating Temperature Range		-40°C~+125°C
Voltage Drop		3mV/A
Isolation Resistance		100MΩ
Dielectric Resistance		1500V
Applicable Wire Size		0.3mm² ~2.0mm² (22 AWG~14 AWG)
Maximum Electric Current		12A

0.93 (2.36) KST PIN AND SOCKET

UNSEALED

TERMINAL

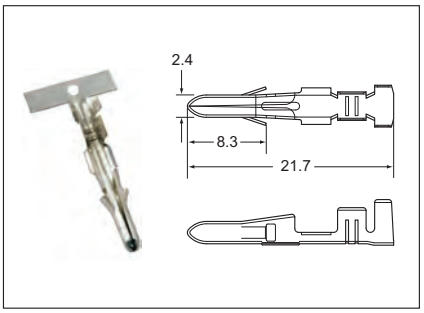

ITEM NO.	WIRE RANGE		MATERIAL	PLATINGS	Q'TY	APPLICATOR	DIES
	A.W.G.	mm²			REEL		
1101Z0080	18-22	0.85-0.3	Brass	Pre-Tin	5000	CDM-98023-S	CDT-98023-S
1101Z0081	14-18	2.0-0.85	Brass	Pre-Tin	5000	CDM-98023-M	CDT-98023-M

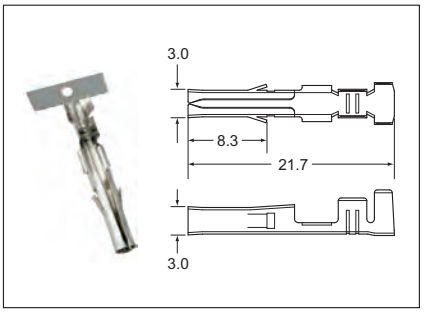

ITEM NO.	WIRE RANGE		MATERIAL	PLATINGS	Q'TY	APPLICATOR	DIES
	A.W.G.	mm²			REEL		
1201Z0080	18-22	0.85-0.3	Brass	Pre-Tin	5000	CDM-98024-S	CDT-98024-S
1201Z0081	14-18	2.0-0.85	Brass	Pre-Tin	5000	CDM-98024-M	CDT-98024-M

HOUSING

POLE	MALE	FEMALE
2	**3102Z0181**  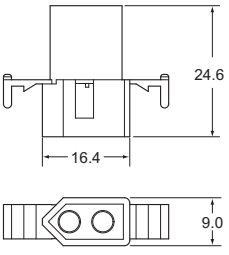 **100 PCS**	**3202Z0181**  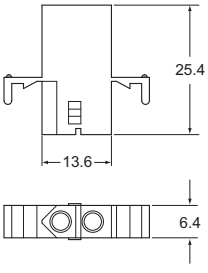 **100 PCS**
4	**3104Z0181**  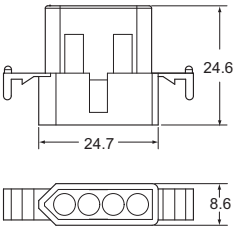 **250 PCS**	**3204Z0181**  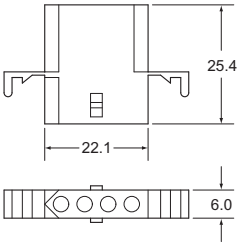 **250 PCS**

• HOUSING (UNIT:mm)
MATERIAL:NY66
COLOR:NATURAL

0.93 (2.36) KST PIN AND SOCKET

UNSEALED

HOUSING

POLE	MALE	FEMALE
6	**3106Z0181**  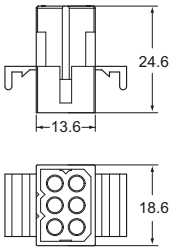 **250 PCS**	**3206Z0181**  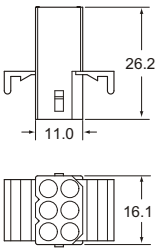 **250 PCS**
9	**3109Z0181**  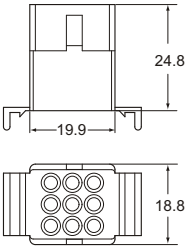 **100 PCS**	**3209Z0181**  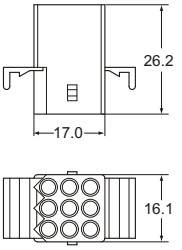 **100 PCS**
12	**3112Z0181**  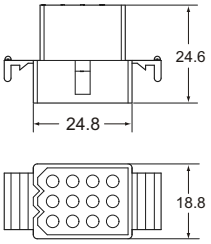 **100 PCS**	**3212Z0181**  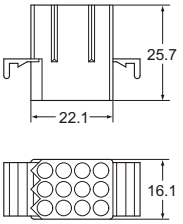 **100 PCS**

- HOUSING (UNIT:mm)
  MATERIAL:NY66
  COLOR:NATURAL

1.25 (3.18) KST PIN AND SOCKET
UNSEALED

CONSTRUCTION

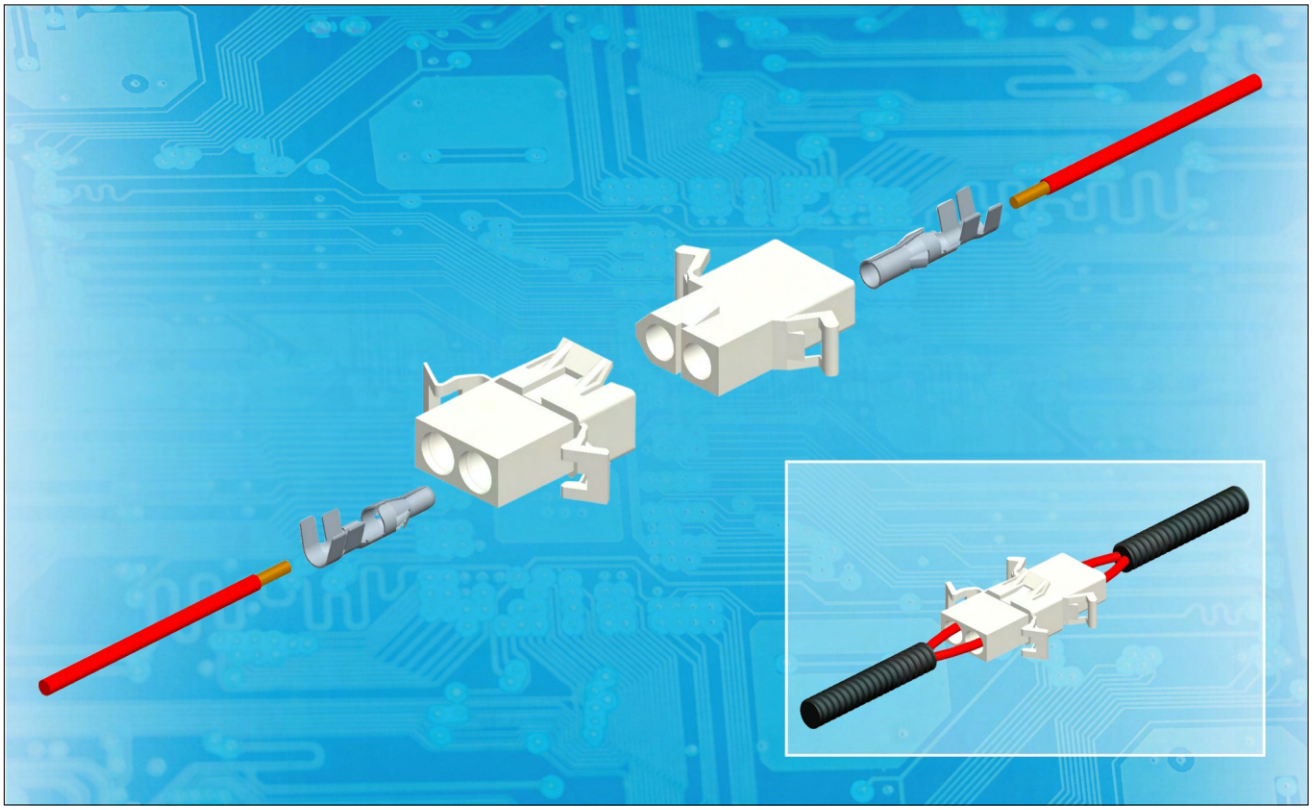

SPECIFICATIONS

Material	Connector	NY66
	Male Terminal	BRASS
	Female Terminal	BRASS
Operating Temperature Range		-40°C~+105°C
Voltage Drop		10mV/A
Isolation Resistance		100MΩ
Dielectric Resistance		1500V
Applicable Wire Size		0.5mm² ~2.0mm² (20 AWG~14 AWG)
Maximum Electric Current		18A

1.25 (3.18) KST PIN AND SOCKET

UNSEALED

TERMINAL

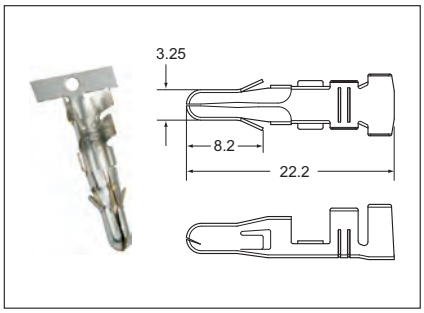

ITEM NO.	WIRE RANGE A.W.G.	WIRE RANGE mm^2	MATERIAL	PLATINGS	Q'TY REEL	APPLICATOR	DIES
1101Z0087	20-14	0.5-2.0	Brass	Pre-Tin	3000	CDM-98025-L	CDT-98025-L

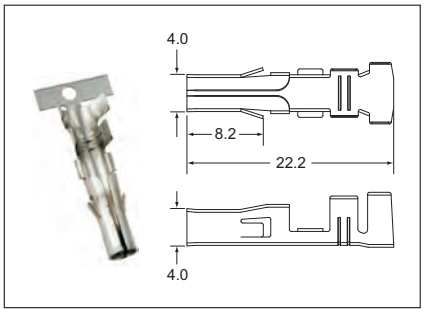

ITEM NO.	WIRE RANGE A.W.G.	WIRE RANGE mm^2	MATERIAL	PLATINGS	Q'TY REEL	APPLICATOR	DIES
1201Z0087	20-14	0.5-2.0	Brass	Pre-Tin	3000	CDM-98026-L	CDT-98026-L

HOUSING

POLE	MALE	FEMALE
2	**3102Z0081**  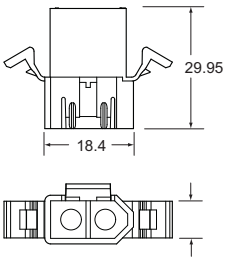 **100 PCS**	**3202Z0081**  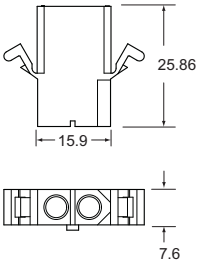 **250 PCS**

- HOUSING (UNIT:mm)
  MATERIAL:NY66
  COLOR:NATURAL

DT
PIN TYPE SOCKET
SEALED

SPECIFICATIONS

Material	Connector	NY66
	Male Terminal	-
	Female Terminal	-
Operating Temperature Range		-55°C~+125°C
Voltage Drop		-
Isolation Resistance		100MΩ
Dielectric Resistance		1500V
Applicable Wire Size		-
Maximum Electric Current		-

DT
PIN TYPE SOCKET
SEALED

TERMINAL

POLE	FEMALE	LOCK
2	**3202A0582**  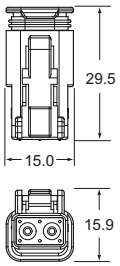 **100 PCS**	**3702A0587**  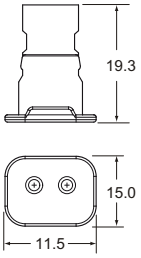 **100 PCS**
3	**3203A0582**  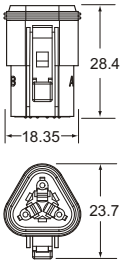 **100 PCS**	**3703A0587**  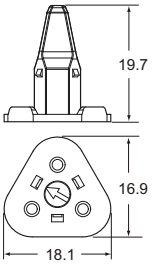 **100 PCS**

POLE	FEMALE	LOCK
6	**3206A0599**  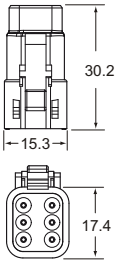 **100 PCS**	**3706A0598**  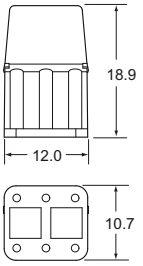 **100 PCS**

- HOUSING (UNIT:mm)
  MATERIAL:NY66
  COLOR:HOUSING:3202A0582, 3203A0582:BLACK
  3206A0599:GREY
  LOCK:3702A0587, 3703A0587:GREEN
  3706A0598:ORANGE

JSTC
EL TERMINALS

SPECIFICATIONS

Material	Connector	-
	Male Terminal	BRASS
	Female Terminal	-
Operating Temperature Range		-40°C~+120°C
Voltage Drop		5mV/A
Isolation Resistance		-
Dielectric Resistance		-
Applicable Wire Size		0.5mm^2 ~1.25mm^2 (20 AWG~16 AWG)
Maximum Electric Current		15A

JSTC
EL TERMINALS

TERMINAL

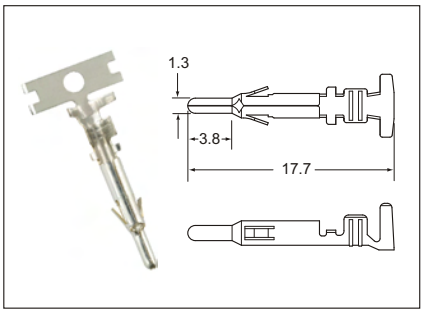

ITEM NO.	WIRE RANGE		MATERIAL	PLATINGS	Q'TY	APPLICATOR	DIES
	A.W.G.	mm^2			REEL		
1101Z0151	20-16	0.5-1.25	Brass	Pre-Tin	4000	CDM-98050-S	CDT-98050-S

SMTO
UNSEALED

SPECIFICATIONS

Material	Connector	NY66
	Male Terminal	-
	Female Terminal	COPPER ALLOY
Operating Temperature Range		-40°C~+120°C
Voltage Drop		3mV/A
Isolation Resistance		100MΩ
Dielectric Resistance		1500V
Applicable Wire Size		0.85mm^2 ~1.25mm^2 (18 AWG~16 AWG)
Maximum Electric Current		13A

SMTO
UNSEALED

TERMINAL

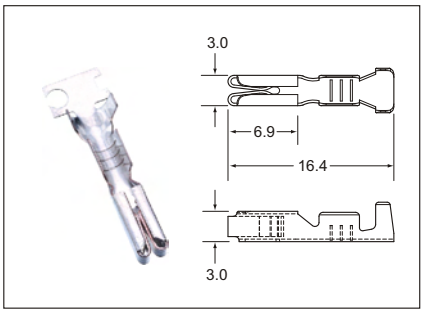

ITEM NO.	WIRE RANGE		MATERIAL	PLATINGS	Q'TY	APPLICATOR	DIES
	A.W.G.	mm^2			REEL		
1211A0085	18-16	0.85-1.25	Copper Alloy	Pre-Tin	5000	CDM-94106-M	CDT-94106-M
1211A0089	22-20	0.3-0.5	Copper Alloy	Pre-Tin	5000	CDM-94106-S	CDT-94106-S

HOUSING

POLE		FEMALE
3		**3203A0087**  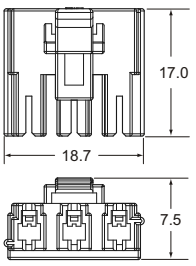 **100 PCS**

• HOUSING (UNIT:mm)
MATERIAL:NY66
COLOR:GREEN

SMTO
AUTO FUSE SERIES

SPECIFICATIONS

Material	Connector	NY66
	Male Terminal	-
	Female Terminal	BRASS
Operating Temperature Range		-40°C~+120°C
Voltage Drop		3mV/A
Isolation Resistance		100MΩ
Dielectric Resistance		1500V
Applicable Wire Size		0.3mm^2 ~3.0mm^2 (20 AWG~12 AWG)
Maximum Electric Current		18A

SMTO
AUTO FUSE SERIES

TERMINAL

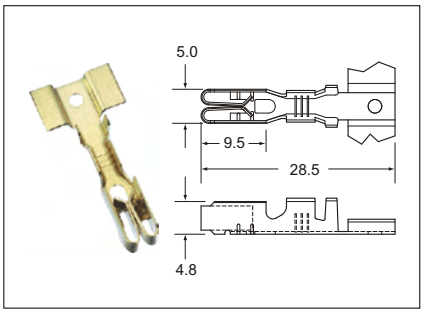

ITEM NO.	WIRE RANGE		MATERIAL	PLATINGS	Q'TY	APPLICATOR	DIES
	A.W.G.	mm^2			REEL		
1200A0151	20-16	0.3-1.25	Brass	None	2500	CDM-95012-M	CDT-95012-M
1200A0152	14-12	2.0-3.0	Brass	None	2500	CDM-95012-L	CDT-95012-L
1201A0151	20-16	0.3-1.25	Brass	Pre-Tin	2500	CDM-95012-M	CDT-95012-M
1201A0152	14-12	2.0-3.0	Brass	Pre-Tin	2500	CDM-95012-L	CDT-95012-L
1205A0151	20-16	0.3-1.25	Brass	Tin	2500	CDM-95012-M	CDT-95012-M
1205A0152	14-12	2.0-3.0	Brass	Tin	2500	CDM-95012-L	CDT-95012-L

FUSE HOLDERS

POLE	FEMALE
8	**3208A0152** 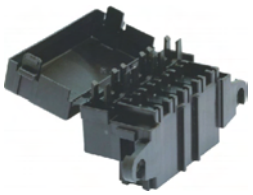 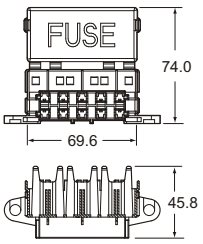 **5 PCS**

- HOUSING (UNIT:mm)
  MATERIAL:NY66
  COLOR:BLACK

KST
AUTO FUSE HOLDER
UNSEALED

SPECIFICATIONS

Material	Connector	NY66
	Male Terminal	-
	Female Terminal	BRASS
Operating Temperature Range		-40°C~+120°C
Voltage Drop		3mV/A
Isolation Resistance		100MΩ
Dielectric Resistance		1000V
Applicable Wire Size		0.5mm^2 ~2.0mm^2 (20 AWG~14 AWG)
Maximum Electric Current		18A

KST
AUTO FUSE SERIES
UNSEALED

TERMINAL

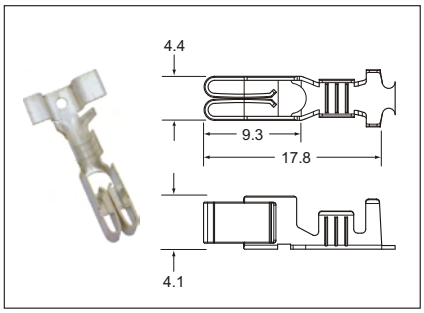

ITEM NO.	WIRE RANGE		MATERIAL	PLATINGS	Q'TY	APPLICATOR	DIES
	A.W.G.	mm^2			REEL		
1200A0672	18-14	0.85-2.0	Brass	None	2500	CDM-96035-M	CDT-96035-M
1200A0673	16+16	1.25+1.25	Brass	None	2500	CDM-96035-L	CDT-96035-L
1201A0671	20-16	0.5-1.25	Brass	Pre-Tin	2500	CDM-96035-S	CDT-96035-S
1201A0672	18-14	0.85-2.0	Brass	Pre-Tin	2500	CDM-96035-M	CDT-96035-M
1201A0673	16+16	1.25+1.25	Brass	Pre-Tin	2500	CDM-96035-L	CDT-96035-L
1205A0672	18-14	0.85-2.0	Brass	Tin	2500	CDM-96035-M	CDT-96035-M
1205A0673	16+16	1.25+1.25	Brass	Tin	2500	CDM-96035-L	CDT-96035-L

FUSE HOLDERS

POLE	FEMALE
2	**3202A0672**  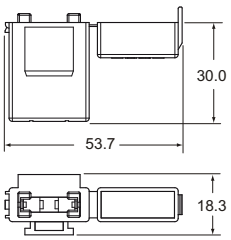 **100 PCS**

- HOUSING (UNIT:mm)
  MATERIAL:NY66
  COLOR:BLACK

AUTOMOBILE FUSE SERIES

SPECIFICATIONS

Material	Connector	-
	Male Terminal	-
	Female Terminal	COPPER ALLOY OR BRASS
Operating Temperature Range		-40°C~+120°C
Voltage Drop		5mV/A
Isolation Resistance		-
Dielectric Resistance		-
Applicable Wire Size		0.3mm^2 ~2.0mm^2 (22 AWG~14 AWG)
Maximum Electric Current		25A

AUTOMOBILE FUSE SERIES

TERMINAL

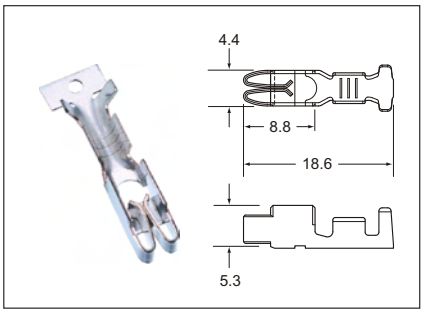

ITEM NO.	WIRE RANGE		MATERIAL	PLATINGS	Q'TY	APPLICATOR	DIES
	A.W.G.	mm²			REEL		
1211A0140	22-20	0.3-0.5	Copper Alloy	Pre-Tin	2000	CDM-94130-S	CDT-94130-S
1211A0142	18-14	0.85-2.0	Copper Alloy	Pre-Tin	2000	CDM-94130-L	CDT-94130-L

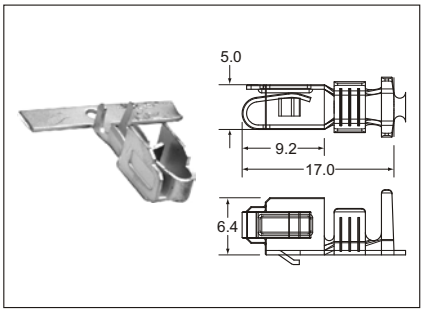

ITEM NO.	WIRE RANGE		MATERIAL	PLATINGS	Q'TY	APPLICATOR	DIES
	A.W.G.	mm²			REEL		
1200A0246	18-16	0.85-1.25	Brass	None	2000	CDM-97002-M	CDT-97002-M
1200A0247	16-14	1.25-2.0	Brass	None	1500	CDM-97002-L	CDT-97002-L
1201A0246	18-16	0.85-1.25	Brass	Pre-Tin	1500	CDM-97002-M	CDT-97002-M
1201A0247	16-14	1.25-2.0	Brass	Pre-Tin	1500	CDM-97002-L	CDT-97002-L
1205A0246	18-16	0.85-1.25	Brass	Tin	2000	CDM-97002-M	CDT-97002-M
1205A0247	16-14	1.25-2.0	Brass	Tin	1500	CDM-97002-L	CDT-97002-L

BULLET TERMINAL

SPECIFICATIONS

Material	Connector	-
	Male Terminal	BRASS
	Female Terminal	BRASS
Operating Temperature Range		-40°C~+120°C
Voltage Drop		5mV/A
Isolation Resistance		-
Dielectric Resistance		-
Applicable Wire Size		0.8mm^2 ~2.0mm^2 (18 AWG~14 AWG)
Maximum Electric Current		25A

BULLET TERMINAL

TERMINAL

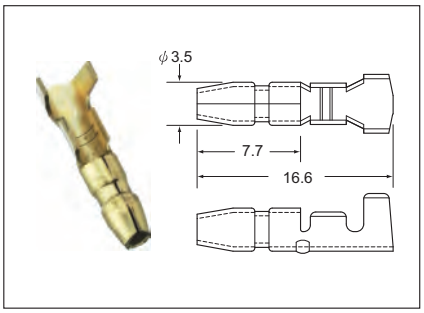

ITEM NO.	WIRE RANGE		MATERIAL	PLATINGS	Q'TY	APPLICATOR	DIES
	A.W.G.	mm²			REEL		
MPM350-01B2	18-16	0.8-1.4	Brass	Tin	8000	CDM-96012-M	CDT-96012-M
MPM350-01B9	18-16	0.8-1.4	Brass	None	8000	CDM-96012-M	CDT-96012-M
MPM350-01BT	18-16	0.8-1.4	Brass	Pre-Tin	8000	CDM-96012-M	CDT-96012-M

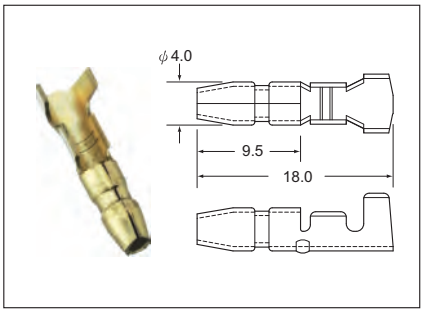

ITEM NO.	WIRE RANGE		MATERIAL	PLATINGS	Q'TY	APPLICATOR	DIES
	A.W.G.	mm²			REEL		
MPM400-01B2	18-16	0.8-1.4	Brass	Tin	7000	CDM-96017-M	CDT-96017-M
MPM400-01B9	18-16	0.8-1.4	Brass	None	7000	CDM-96017-M	CDT-96017-M
MPM400-01BT	18-16	0.8-1.4	Brass	Pre-Tin	7000	CDM-96017-M	CDT-96017-M

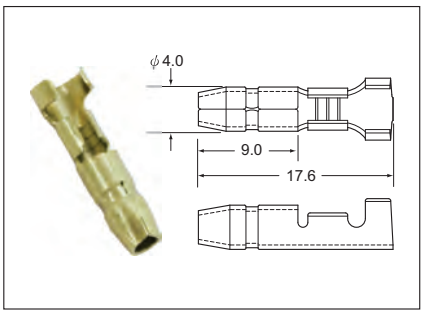

ITEM NO.	WIRE RANGE		MATERIAL	PLATINGS	Q'TY	APPLICATOR	DIES
	A.W.G.	mm²			BAG		
MPM400-02B9L	16-14	1.4-2.0	Brass	None	1000	CDM-98016-L	CDT-98016-L

BULLET TERMINAL

TERMINAL

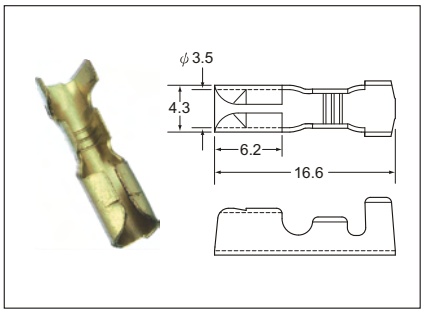

ITEM NO.	WIRE RANGE		MATERIAL	PLATINGS	Q'TY REEL	APPLICATOR	DIES
	A.W.G.	mm²					
FRM350-01B2	18-16	0.8-1.4	Brass	Tin	8000	CDM-96012-M	CDT-96012-M
FRM350-01B9	18-16	0.8-1.4	Brass	None	8000	CDM-96012-M	CDT-96012-M
FRM350-01BT	18-16	0.8-1.4	Brass	Pre-Tin	8000	CDM-96012-M	CDT-96012-M

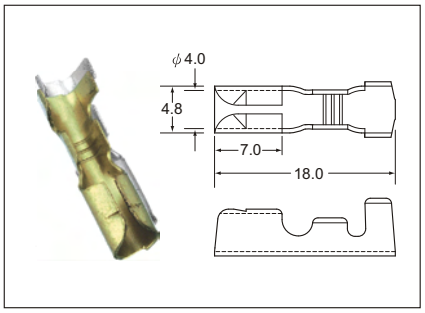

ITEM NO.	WIRE RANGE		MATERIAL	PLATINGS	Q'TY REEL	APPLICATOR	DIES
	A.W.G.	mm²					
FRM400-01B2	18-16	0.8-1.4	Brass	Tin	7000	CDM-96017-M	CDT-96017-M
FRM400-01B9	18-16	0.8-1.4	Brass	None	7000	CDM-96017-M	CDT-96017-M
FRM400-01BT	18-16	0.8-1.4	Brass	Pre-Tin	7000	CDM-96017-M	CDT-96017-M

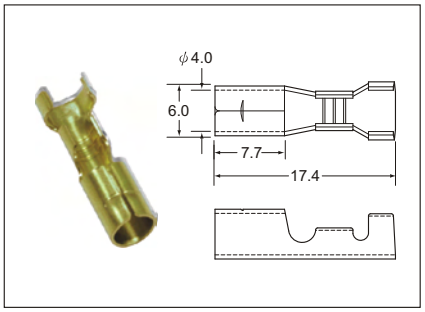

ITEM NO.	WIRE RANGE		MATERIAL	PLATINGS	Q'TY REEL	APPLICATOR	DIES
	A.W.G.	mm²					
FRM400-02B9L	16-14	1.4-2.0	Brass	None	500	CDM-98017-M	CDT-98017-M

RING TONGUE TERMINAL

SPECIFICATIONS

Material	Connector	-
	Terminal	BRASS OR FE
Operating Temperature Range		-40°C~+120°C
Voltage Drop		5mV/A
Isolation Resistance		-
Dielectric Resistance		-
Applicable Wire Size		$0.3mm^2$ ~$6.0mm^2$ (22 AWG~10 AWG)
Maximum Electric Current		40A

RING TONGUE TERMINALS

TERMINAL

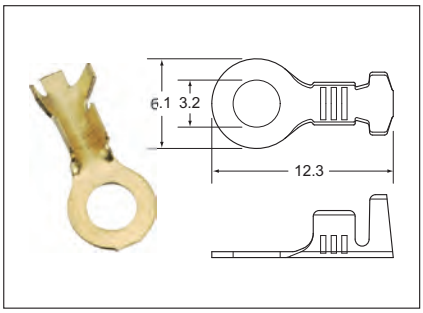

ITEM NO.	WIRE RANGE		MATERIAL	PLATINGS	Q'TY	APPLICATOR	DIES
	A.W.G.	mm²			REEL		
RM030-01B2	22-16	0.3-1.4	Brass	Tin	10000	CDM-96012-M	CDT-96012-M
RM030-01B9	22-16	0.3-1.4	Brass	None	8000	CDM-96012-M	CDT-96012-M
RM030-01BT	22-16	0.3-1.4	Brass	Pre-Tin	10000	CDM-96012-M	CDT-96012-M

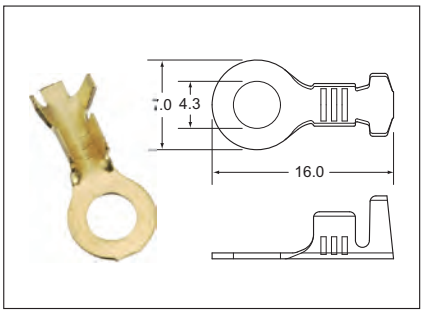

ITEM NO.	WIRE RANGE		MATERIAL	PLATINGS	Q'TY	APPLICATOR	DIES
	A.W.G.	mm²			REEL		
RM040-01B2	22-16	0.3-1.4	Brass	Tin	7000	CDM-96017-M	CDT-96017-M
RM040-01B9	22-16	0.3-1.4	Brass	None	7000	CDM-96017-M	CDT-96017-M
RM040-01BT	22-16	0.3-1.4	Brass	Pre-Tin	7000	CDM-96017-M	CDT-96017-M

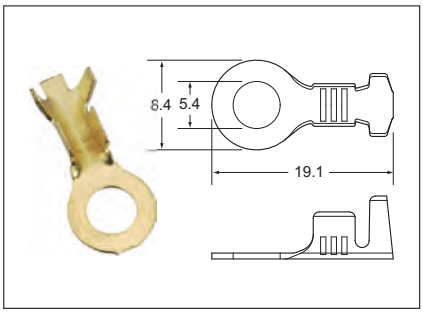

ITEM NO.	WIRE RANGE		MATERIAL	PLATINGS	Q'TY	APPLICATOR	DIES
	A.W.G.	mm²			REEL		
RM050-01B2	22-16	0.3-1.4	Brass	Tin	5000	CDM-96017-M	CDT-96017-M
RM050-01B9	22-16	0.3-1.4	Brass	None	5000	CDM-96017-M	CDT-96017-M
RM050-01BT	22-16	0.3-1.4	Brass	Pre-Tin	5000	CDM-96017-M	CDT-96017-M

RING TONGUE TERMINALS

TERMINAL

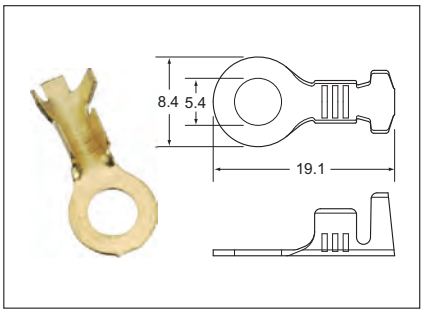

ITEM NO.	WIRE RANGE		MATERIAL	PLATINGS	Q'TY	APPLICATOR	DIES
	A.W.G.	mm^2			REEL		
RL050-03B2	18-14	0.85-2.0	Brass	Tin	5000	CDM-96017-L	CDT-96017-L
RL050-03B9	18-14	0.85-2.0	Brass	None	7000	CDM-96017-L	CDT-96017-L
RL050-03BT	18-14	0.85-2.0	Brass	Pre-Tin	7000	CDM-96017-L	CDT-96017-L

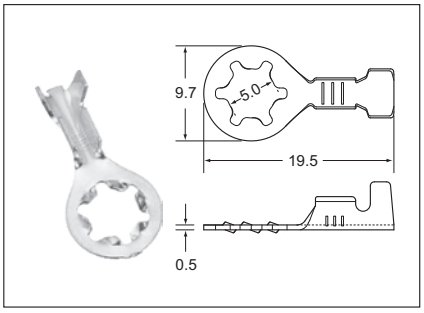

ITEM NO.	WIRE RANGE		MATERIAL	PLATINGS	Q'TY	APPLICATOR	DIES
	A.W.G.	mm^2			REEL		
RM050-02B2	20-16	0.5-1.4	Brass	Tin	5000	CDM-98018-M	CDT-98018-M
RM050-02B9	20-16	0.5-1.4	Brass	None	5000	CDM-98018-M	CDT-98018-M
RM050-02BT	20-16	0.5-1.4	Brass	Pre-Tin	5000	CDM-98018-M	CDT-98018-M

SQUARE TERMINAL

SPECIFICATIONS

Material	Connector	-
	Terminal	BRASS
Operating Temperature Range		-40°C~+120°C
Voltage Drop		5mV/A
Isolation Resistance		-
Dielectric Resistance		-
Applicable Wire Size		0.3mm^2 ~1.4mm^2 (22 AWG~16 AWG)
Maximum Electric Current		18A

SQUARE TERMINALS

TERMINAL

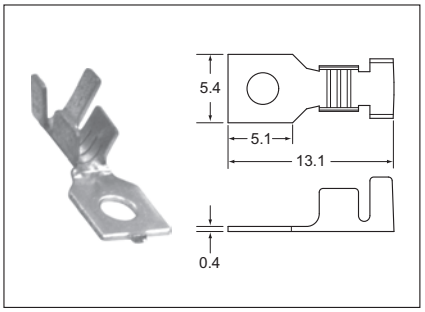

ITEM NO.	WIRE RANGE A.W.G.	WIRE RANGE mm²	MATERIAL	PLATINGS	Q'TY REEL	APPLICATOR	DIES
NM000-01B9	22-18	0.3-0.8	Brass	None	10000	CDM-98020-M	CDT-98020-M

SPADE TONGUE TERMINALS

TERMINAL

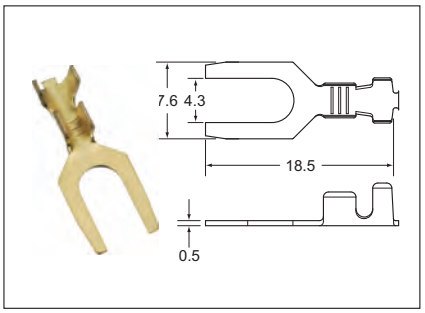

ITEM NO.	WIRE RANGE A.W.G.	WIRE RANGE mm²	MATERIAL	PLATINGS	Q'TY REEL	APPLICATOR	DIES
SM040-01B2	22-16	0.3-1.4	Brass	Tin	5000	CDM-93044-M	CDT-93044-M
SM040-01B9	22-16	0.3-1.4	Brass	None	5000	CDM-93044-M	CDT-93044-M
SM040-01BT	22-16	0.3-1.4	Brass	Pre-Tin	5000	CDM-93044-M	CDT-93044-M

SPLICE TERMINALS

TERMINAL

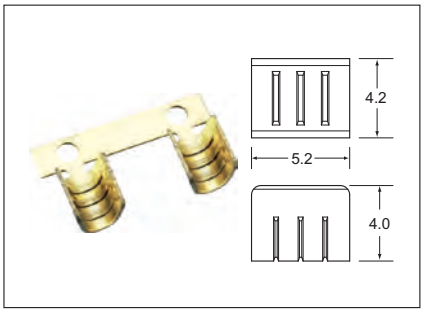

ITEM NO.	WIRE RANGE A.W.G.	WIRE RANGE mm²	MATERIAL	PLATINGS	Q'TY REEL	APPLICATOR	DIES
LM000-01B9	18-16	0.8-1.4	Brass	None	5000	CDM-98021-M	CDT-98021-M

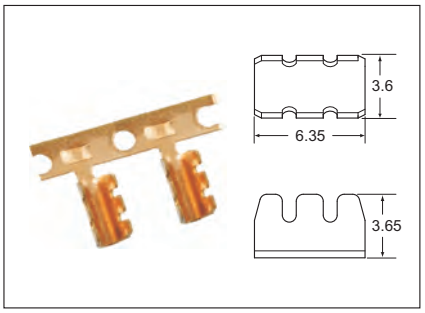

ITEM NO.	WIRE RANGE A.W.G.	WIRE RANGE mm²	MATERIAL	PLATINGS	Q'TY REEL	APPLICATOR	DIES
LM000-04K9	18-16	0.85-1.25	Brass	None	5000	CDM-9802-M	CDT-9802-M

PCB TERMINAL

TERMINAL

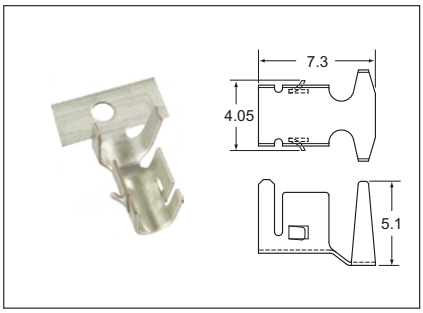

ITEM NO.	WIRE RANGE		MATERIAL	PLATINGS	Q'TY	APPLICATOR	DIES
	A.W.G.	mm^2			REEL		
LL000-06PT	18-14	0.8-2.0	Phosphor Bronze	Pre-Tin	2500	CDM-99008-L	CDT-99008-L

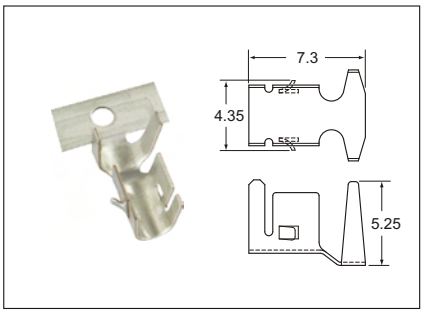

ITEM NO.	WIRE RANGE		MATERIAL	PLATINGS	Q'TY	APPLICATOR	DIES
	A.W.G.	mm^2			REEL		
LJ000-06PT	12-10	3.0-5.5	Phosphor Bronze	Pre-Tin	2500	CDM-99009-J	CDT-99009-J

BATTERY SERIES

SPECIFICATIONS

Material	Connector	-
	Terminal	BRASS
Operating Temperature Range		-40°C~+120°C
Voltage Drop		5mV/A
Isolation Resistance		-
Dielectric Resistance		-
Applicable Wire Size		-
Maximum Electric Current		78A

BATTERY SERIES

TERMINAL

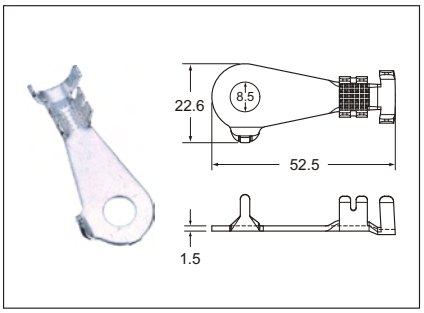

ITEM NO.	WIRE RANGE A.W.G.	WIRE RANGE mm²	MATERIAL	PLATINGS	Q'TY BAG	APPLICATOR	DIES
1000A0021L	-	13/19	Brass	None	100	CDM-98033	CDT-98033
1005A0021L	-	13/19	Brass	None	100	CDM-98033	CDT-98033

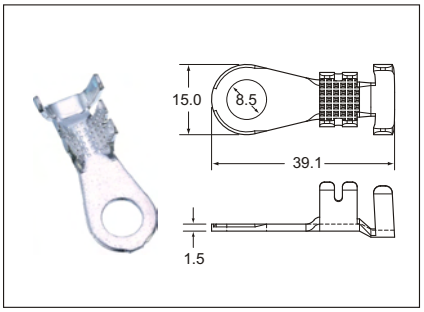

ITEM NO.	WIRE RANGE A.W.G.	WIRE RANGE mm²	MATERIAL	PLATINGS	Q'TY BAG	APPLICATOR	DIES
1000A0026L	-	13/19	Brass	None	100	CDM-98034	CDT-98034
1005A0026L	-	13/19	Brass	Tin	100	CDM-98034	CDT-98034

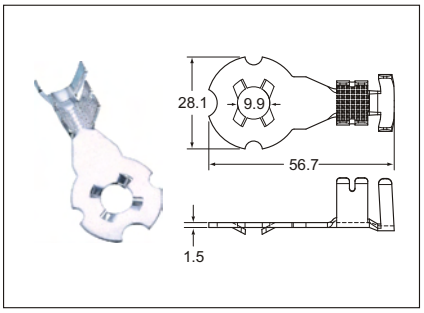

ITEM NO.	WIRE RANGE A.W.G.	WIRE RANGE mm²	MATERIAL	PLATINGS	Q'TY BAG	APPLICATOR	DIES
1000A0032L	-	32	Brass	None	100	CDM-98035	CDT-98035
1005A0032L	-	32	Brass	Tin	100	CDM-98035	CDT-98035

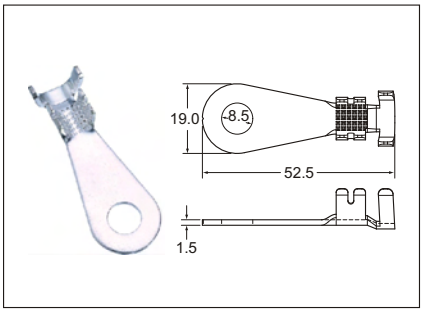

ITEM NO.	WIRE RANGE A.W.G.	WIRE RANGE mm²	MATERIAL	PLATINGS	Q'TY BAG	APPLICATOR	DIES
1000A0036L	-	13/19	Brass	None	100	CDM-98036	CDT-98036
1005A0036L	-	13/19	Brass	Tin	100	CDM-98036	CDT-98036

BATTERY SERIES

TERMINAL

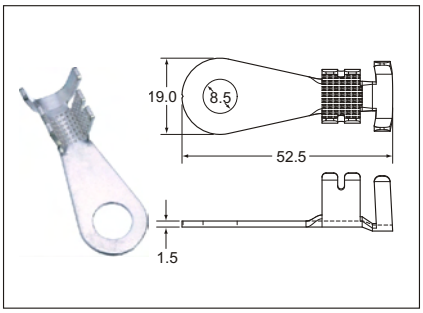

ITEM NO.	WIRE RANGE A.W.G.	WIRE RANGE mm²	MATERIAL	PLATINGS	Q'TY BAG	APPLICATOR	DIES
1000A0037L	-	32	Brass	None	100	CDM-98037	CDT-98037
1005A0037L	-	32	Brass	Tin	100	CDM-98037	CDT-98037

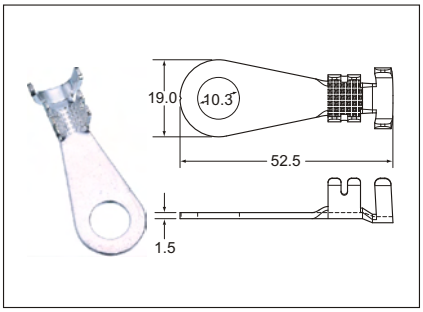

ITEM NO.	WIRE RANGE A.W.G.	WIRE RANGE mm²	MATERIAL	PLATINGS	Q'TY BAG	APPLICATOR	DIES
1000A0041L	-	13/19	Brass	None	100	CDM-98038	CDT-98038
1005A0041L	-	13/19	Brass	Tin	100	CDM-98038	CDT-98038

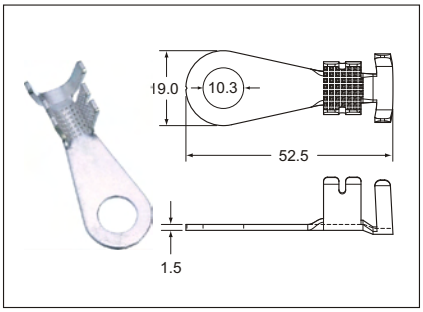

ITEM NO.	WIRE RANGE A.W.G.	WIRE RANGE mm²	MATERIAL	PLATINGS	Q'TY BAG	APPLICATOR	DIES
1000A0042L	-	32	Brass	None	100	CDM-98039	CDT-98039
1005A0042L	-	32	Brass	Tin	100	CDM-98039	CDT-98039

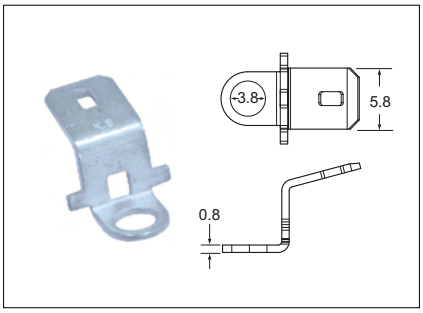

ITEM NO.	WIRE RANGE A.W.G.	WIRE RANGE mm²	MATERIAL	PLATINGS	Q'TY BAG	APPLICATOR	DIES
1000A0049L	-	-	Brass	None	100	CDM-98040	CDT-98040
1005A0049L	-	-	Brass	Tin	100	CDM-98040	CDT-98040

BATTERY SERIES

TERMINAL

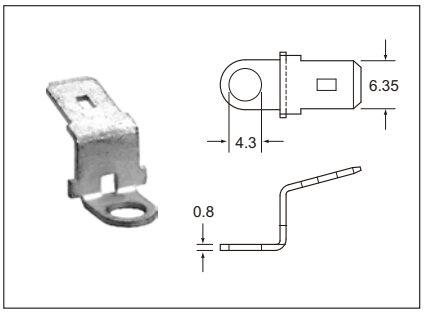

ITEM NO.	WIRE RANGE A.W.G.	WIRE RANGE mm²	MATERIAL	PLATINGS	Q'TY BAG	APPLICATOR	DIES
1000A0054L	-	-	Brass	None	100	-	-
1005A0054L	-	-	Brass	Tin	100	-	-

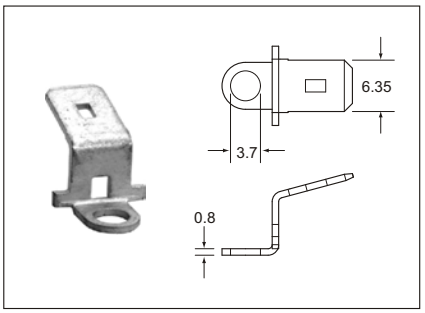

ITEM NO.	WIRE RANGE A.W.G.	WIRE RANGE mm²	MATERIAL	PLATINGS	Q'TY BAG	APPLICATOR	DIES
1000A0059L	-	-	Brass	None	100	-	-
1005A0059L	-	-	Brass	Tin	100	-	-

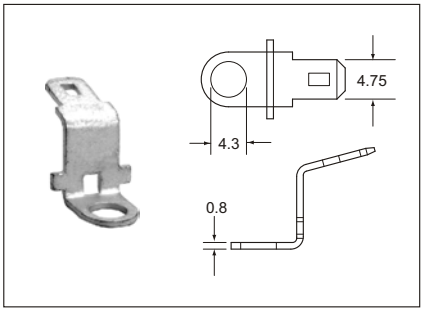

ITEM NO.	WIRE RANGE A.W.G.	WIRE RANGE mm²	MATERIAL	PLATINGS	Q'TY BAG	APPLICATOR	DIES
1000A0064L	-	-	Brass	None	100	-	-
1005A0064L	-	-	Brass	Tin	100	-	-

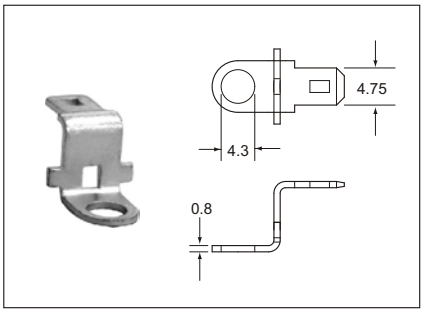

ITEM NO.	WIRE RANGE A.W.G.	WIRE RANGE mm²	MATERIAL	PLATINGS	Q'TY BAG	APPLICATOR	DIES
1000A0069L	-	-	Brass	None	100	-	-
1005A0069L	-	-	Brass	Tin	100	-	-

BATTERY SERIES

TERMINAL

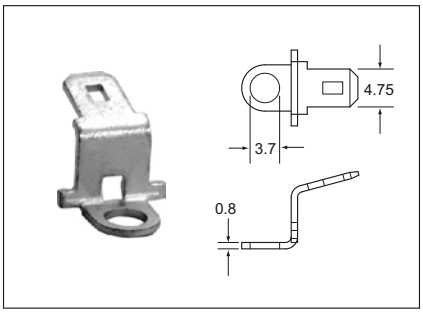

ITEM NO.	WIRE RANGE		MATERIAL	PLATINGS	Q'TY	APPLICATOR	DIES
	A.W.G.	mm^2			BAG		
1000A0074L	-	-	Brass	None	100	-	-
1005A0074L	-	-	Brass	Tin	100	-	-

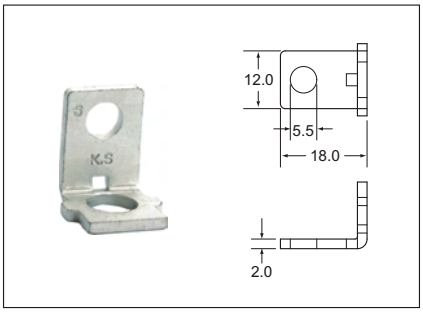

ITEM NO.	WIRE RANGE		MATERIAL	PLATINGS	Q'TY	APPLICATOR	DIES
	A.W.G.	mm^2			BAG		
1000A0079L	-	-	Brass	None	100		
1005A0079L	-	-	Brass	Tin	100		

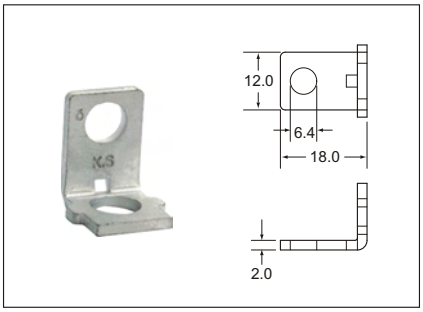

ITEM NO.	WIRE RANGE		MATERIAL	PLATINGS	Q'TY	APPLICATOR	DIES
	A.W.G.	mm^2			BAG		
1000A0084L	-	-	Brass	None	100		
1005A0084L	-	-	Brass	Tin	100		

LIGHTING SERIES

SPECIFICATIONS

Material	Connector	-
	Terminal	PHOSPHOR BRONZE OR BARSS
Operating Temperature Range		-40°C~+120°C
Voltage Drop		5mV/A
Isolation Resistance		-
Dielectric Resistance		-
Applicable Wire Size		$0.3mm^2$ ~$0.85mm^2$ (22 AWG~18 AWG)
Maximum Electric Current		15A

LIGHTING SERIES

TERMINAL

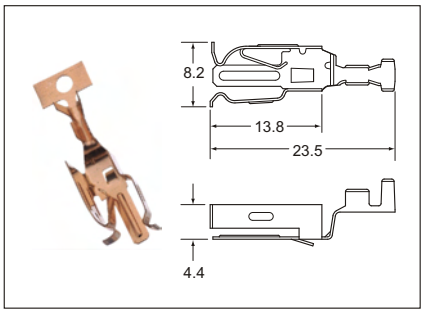

ITEM NO.	WIRE RANGE A.W.G.	WIRE RANGE mm²	MATERIAL	PLATINGS	Q'TY REEL	APPLICATOR	DIES
1020A0001	20-18	0.5-0.85	Phosphor Bronze	None	1500	CDM-98029-M	CDT-98029-M

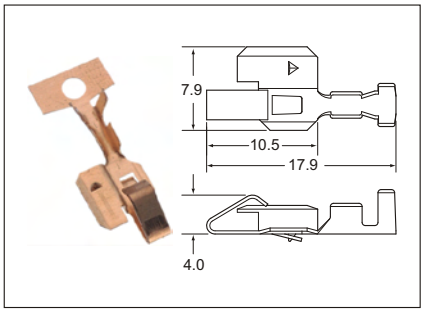

ITEM NO.	WIRE RANGE A.W.G.	WIRE RANGE mm²	MATERIAL	PLATINGS	Q'TY REEL	APPLICATOR	DIES
1020A0005	20-18	0.5-0.85	Phosphor Bronze	None	4000	CDM-98030-S	CDT-98030-S

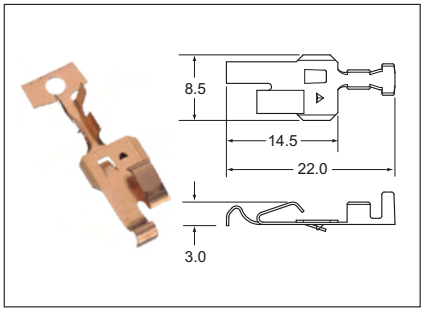

ITEM NO.	WIRE RANGE A.W.G.	WIRE RANGE mm²	MATERIAL	PLATINGS	Q'TY REEL	APPLICATOR	DIES
1020A0010	20-18	0.5-0.85	Phosphor Bronze	None	4000	CDM-98031-S	CDT-98031-S

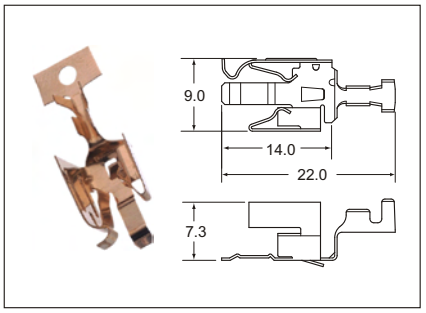

ITEM NO.	WIRE RANGE A.W.G.	WIRE RANGE mm²	MATERIAL	PLATINGS	Q'TY REEL	APPLICATOR	DIES
1020A0015	20-18	0.5-0.85	Phosphor Bronze	None	1000	CDM-98032-S	CDT-98032-S

LIGHTING SERIES

TERMINAL

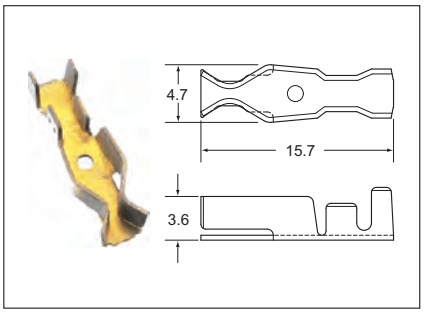

ITEM NO.	WIRE RANGE A.W.G.	WIRE RANGE mm²	MATERIAL	PLATINGS	Q'TY REEL	APPLICATOR	DIES
LS000-02B9	22-20	0.3-0.5	Brass	None	3000	CDM-98027-S	CDT-98027-S

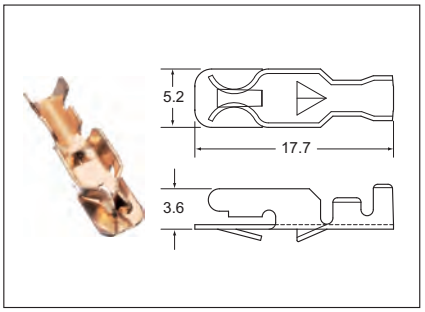

ITEM NO.	WIRE RANGE A.W.G.	WIRE RANGE mm²	MATERIAL	PLATINGS	Q'TY REEL	APPLICATOR	DIES
LS000-02P9	22-20	0.3-0.5	Phosphor Bronze	None	3000	CDM-98028-S	CDT-98028-S

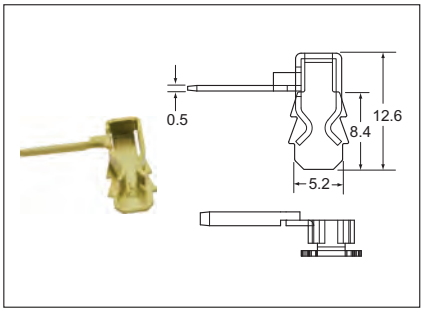

ITEM NO.	WIRE RANGE A.W.G.	WIRE RANGE mm²	MATERIAL	PLATINGS	Q'TY BAG	APPLICATOR	DIES
1000A0390L	-	-	Brass	None	1000	-	-

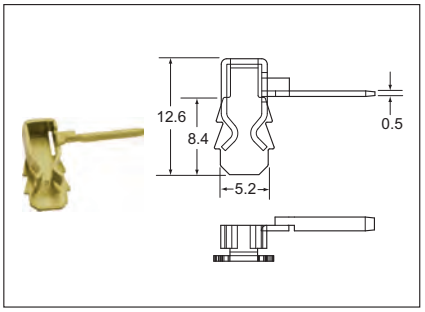

ITEM NO.	WIRE RANGE A.W.G.	WIRE RANGE mm²	MATERIAL	PLATINGS	Q'TY BAG	APPLICATOR	DIES
1000A0391L	-	-	Phosphor Bronze	None	-	-	-

LIGHTING SERIES

SPECIFICATIONS

Material	Connector	NY66
	Male Terminal	-
	Female Terminal	-
Operating Temperature Range		-40°C~+120°C
Voltage Drop		-
Isolation Resistance		100MΩ
Dielectric Resistance		1000V
Applicable Wire Size		-
Maximum Electric Current		-

LIGHTING SERIES

HOUSING

FEMALE	
3202A0374  **50 PCS**	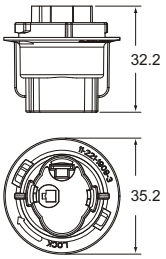
3203A0372  **50 PCS**	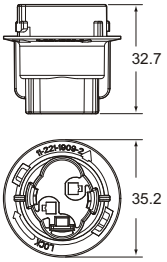

FEMALE	
3202A0384  **50 PCS**	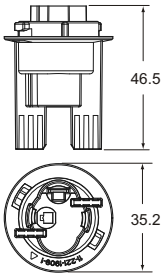

- HOUSING (UNIT:mm)
  MATERIAL:NY66
  COLOR:3202A0374, 3202A0384:WHITE
  3203A0372:BLACK

LIGHT SOCKETS

HOUSING

FEMALE	
3202A0554  **50 PCS**	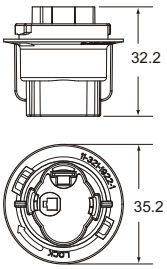
3203A0559  **50 PCS**	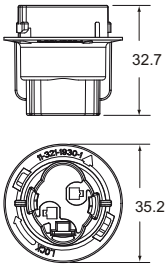

- HOUSING (UNIT:mm)
  MATERIAL:NY66
  COLOR:3202A0554:WHITE
  3203A0559:GREY

OTHER

SPECIFICATIONS

Material	Connector	NY66
	Male Terminal	-
	Female Terminal	-
Operating Temperature Range		-40°C~+120°C
Voltage Drop		-
Isolation Resistance		100MΩ
Dielectric Resistance		1000V
Applicable Wire Size		-
Maximum Electric Current		-

OTHER

SERIES CONNECTION

POLE		FEMALE
2		3202Z0072  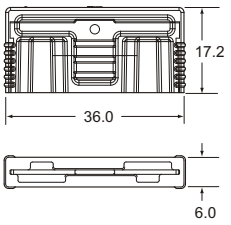 100 PCS

• HOUSING (UNIT:mm)
MATERIAL:NY66
COLOR:BLACK

OTHER

SPECIFICATIONS

Material	Connector	-
	Male Terminal	-
	Female Terminal	-
Operating Temperature Range		-40°C~+120°C
Voltage Drop		-
Isolation Resistance		100MΩ
Dielectric Resistance		1000V
Applicable Wire Size		-
Maximum Electric Current		-

OTHER

SENSOR

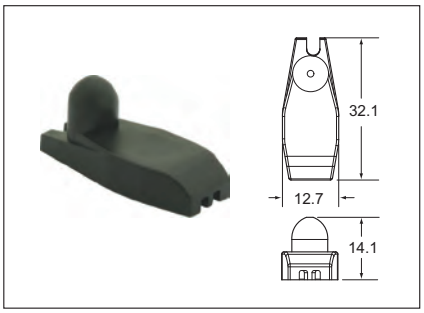

ITEM NO.	MATERIAL	COLOR	Q'TY BAG	WIRE INSULATEION DIAMETER(mm^2)
9900A0002	Brass	BLACK	100	

OTHER

SPECIFICATIONS

Material	Connector	-
	Male Terminal	BRASS
	Female Terminal	-
Operating Temperature Range		-40°C~+120°C
Voltage Drop		3mV/A
Isolation Resistance		-
Dielectric Resistance		-
Applicable Wire Size		1.0mm^2 ~2.0mm^2 (16 AWG~14 AWG)
Maximum Electric Current		25A

OTHER

TERMINAL

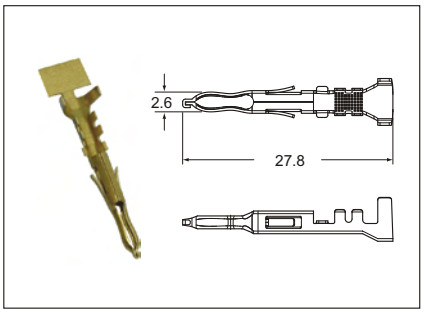

ITEM NO.	WIRE RANGE		MATERIAL	PLATINGS	Q'TY	APPLICATOR	DIES
	A.W.G.	mm^2			REEL		
1101A0236	16-14	1.0-2.0	Brass	Pre-Tin	2000	CDM-97001-M	CDT-97001-M

OTHER

SPECIFICATIONS

Material	Connector	-
	Male Terminal	BRASS
	Female Terminal	-
Operating Temperature Range		-40°C~+120°C
Voltage Drop		5mV/A
Isolation Resistance		-
Dielectric Resistance		-
Applicable Wire Size		-
Maximum Electric Current		-

OTHER

TERMINAL

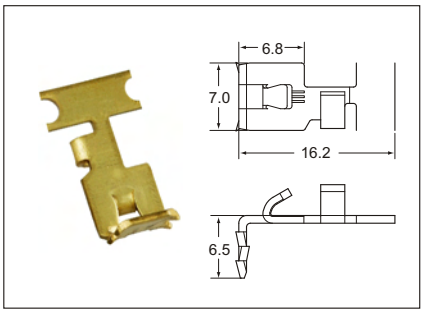

ITEM NO.	WIRE RANGE		MATERIAL	PLATINGS	Q'TY	APPLICATOR	DIES
	A.W.G.	mm^2			REEL		
1000Z0100	-	-	Brass	None	4000	-	-
1005Z0100	-	-	Brass	Tin	4000	-	-

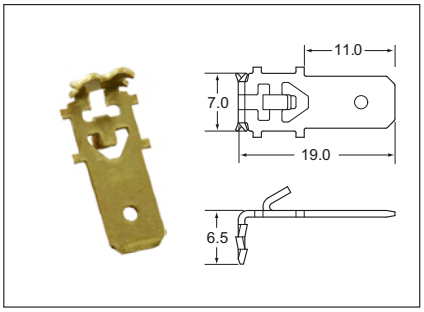

ITEM NO.	WIRE RANGE		MATERIAL	PLATINGS	Q'TY	APPLICATOR	DIES
	A.W.G.	mm^2			REEL		
1100Z0100	-	-	Brass	None	4000	-	-
1100Z0105	-	-	Brass	None	4000	-	-
1105Z0100	-	-	Brass	Tin	4000	-	-
1105Z0105	-	-	Brass	Tin	4000	-	-

KST™

Future Connection

Website : http://shinkwangtrade.com







SHINKWANG TRADE CO.

서울특별시 강남구 삼성동 159-1 한국종합무역센타 30층 3001호

MAIL : sinkwang2000@naver.com

TEL : 02-551-3026 / FAX : 02-551-3100, 3200

H.P : 010-3366-5847